SLATER'S COACH KITS

Diagram E37

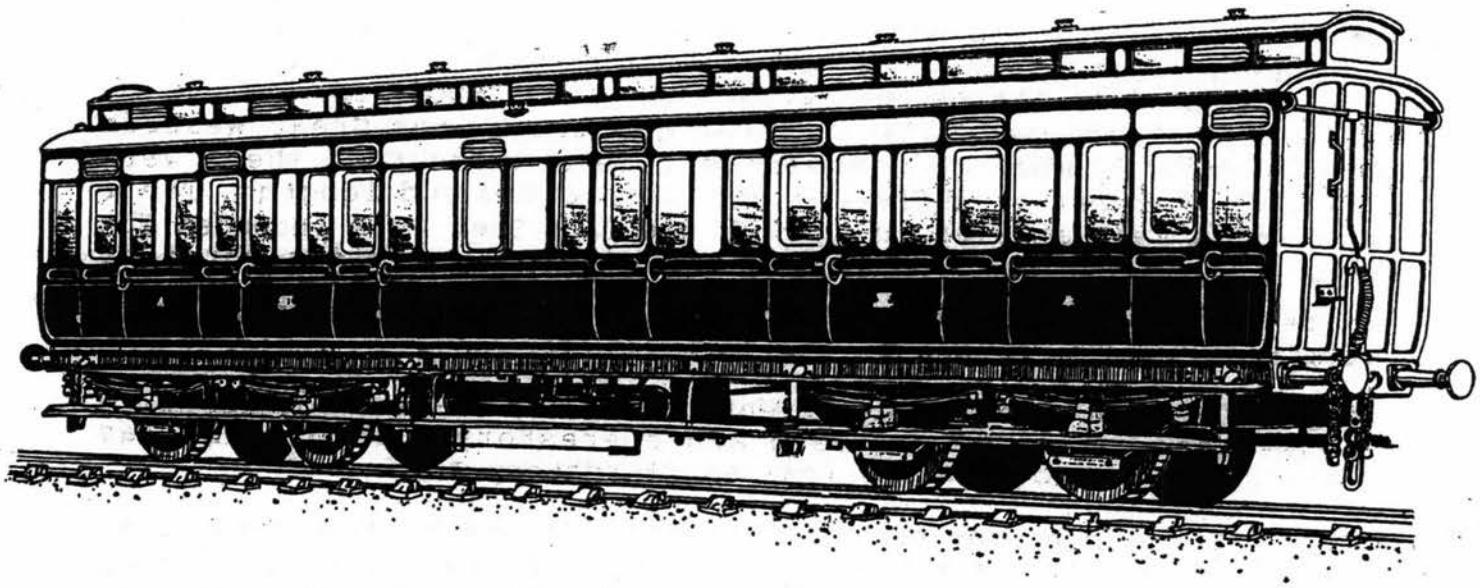

DEAN NON-CORRIDOR 1ST/3RD LAVATORY COMPOSITE

7C09

CONTENTS page

Historical notes.....1 & 2

Diagram information.....3

General construction notes.....4

Pre-construction notes for bogies.....5

Bogie assembly.....6 - 10

Plan and elevation views of coach.....11 & 12

Coach body assembly.....13 & 14

Interior detailing.....14 & 15

Coach roof assembly and detailing.....14 & 16

Underframe.....17 & 18

Fitting the bogies.....19

Footboards and supports.....20

Finishing touches.....21

Livery notes.....22

ASSEMBLY INSTRUCTIONS for 7mm scale 'O' gauge

There are three parts to these instructions - first some background historical information, then the assembly steps with diagrams and finally, some livery notes.

HISTORICAL NOTES.

The first batch of Lavatory Composites to diagram E37 were built in July 1892 and were thus two years old when the first diagram C10 All Third carriages (our first kit) first appeared. Unlike the all third which was built in large numbers by the Great Western only a small number of composites were constructed. These were built to a number of different configurations and lengths. Their history is very similar to that of the C10. They were intended for mainline use but were quickly superseded by the wider corridor stock at the turn of the century and spent the remainder of their working lives on branch and secondary lines.

They were mounted on Dean suspension or 'centre-less' bogies with a wheelbase of 6' 4". The main and clerestory roof profile was based on a three centre arc (called Clerestory III).

A typical train formation would consist of one or two composites with a C10 all third and D14 brake third at each end. Scrapping started in the middle 1930s and it is believed that they were all gone by 1939.

BOGIES

A noteworthy feature of this coach (and our kit) is Dean's suspension bogie as it contributed to a smooth ride and long working life. The load of the coach body was transmitted via scroll-irons bolted onto the solebars down to the bogies instead of using a conventional bolster. These scroll-irons were connected by cross-stays which contained volute springs in spherical cups. The springs are not visible because of the protective 'buckets' fitted onto the ends of the cross-stays. Suspension bolts, hanging from brackets on the bogie frames, were fixed to these volute springs. The axleboxes were fitted with leaf so the body was actually double insulated from track noise and vibration. The improved distribution of load, reduced tendancy of the body to roll and the saving of weight (no need for heavy bolsters) more than offset the cost of maintenance. For coaches 50' and over Dean designed a 10' wheelbase bogie with double volute springs fitted on the cross-stays. The second (inner) pair of springs was mounted 'inside' the bogie frame. On all Dean's suspension bogies a centre pin was fitted but the bogie was allowed to slide laterally approximately 6".

PANELLING.

These coaches had panelled sides and ends and in most cases this was applied to the clerestory deck as well. However in some lots the clerestory sides were unpanelled. As built, the clerestory sides were fitted with glazed panels but problems were encountered with poor sealing that led to rotting of the timber frame. This factor, and the onset of hostilities in 1914 resulted in the painting-over of the windows. Bonnet ventilators (slightly shorter than those above the doors) could be actuated by means of handles near the compartment ceiling. It would be expected that major repairs carried out later in their lives would result in areas of mouldings being replaced with wood or sometimes metal sheeting.

FOOTBOARDS AND STEPS.

When new these coaches were fitted with a continuous upper stepboard (probably 9.5" wide) with a (1" - 1.5" high) upstand along the rear edge. The lower stepboard consisted of three lengths with only the centre section mounted on two hangers fixed to the solebars. This centre section seems to have been removed prior to 1914 and the lower portion of the hangers was cut away. In the 1920s the lower board was removed from the bogies and replaced with a metal step at the coach-end corners of the bogies. To carry this step a second metal support was added to the bogie axleguard alongside the wearing plates. The stepboards were 'notched' on the back edge to clear the axleboxes and the scroll-irons.

SAFETY CHAINS.

These were fitted either side of the main couplings to all vehicles as built but were eventually found to be unnecessary and removed from around the turn of the century.

LIGHTING.

The first vehicles of these types were built with oil lamps but these were replaced by gas lamps fairly on in their life. The first type of gas lamp to be fitted was described as a "flat flame lamp" and gas was fed to them from cylinders mounted on the chassis via a pipe running up the outside of the end of the carriage and along the roof. Branches from the main feed pipe supplied each individual lamp. The later type of gas lamp fitted from the early years of this century was only subtly different to the above in appearance. The difference basically lay in the mantle now used which provided a much better light than previously. In addition, a second pipe was run along the roof which provided a pilot light for each lamp and this meant that a valve could be introduced to switch off the whole supply. This was fitted to the end of the coach just below the regulator and had a long lever so that the supply could be switched off from the platform. For a much more detailed account of the changes and the various types of lamp we recommend that you read articles by John Lewis appearing in the "British Railway Journal" numbers 13 and 16 (Autumn 1986 and Spring 1987 respectively). Note that the kits cater for the later incandescent gas mantle type lamp although it should not be too difficult to produce the earlier type by a little butchery!

ACKNOWLEDGEMENTS AND SOURCES.

These kits were prepared from copies of the original Great Western Railway works drawings. In addition, we have worked from measurements of preserved vehicles and numerous detail drawings of individual components. Many photographs have also been studied to ensure authenticity. We are extremely grateful to Mr. Patrick Reardon for supplying us with the enthusiasm to include as much detail as possible! Mr. John Lewis has been good enough to provide copious notes on the historical details, and Mr. David Geen has filled in some of the other details. Gentlemen, thank you.

REFERENCES.

Several books and magazine articles have appeared over the years which contain photographs and other information on these coach

types. Photographs of trains of them often appear in the many books published about the Great Western Railway and in particular those books and articles about the branch lines. Other sources worth consulting, however, are:

"A Pictorial Record of Great Western Coaches" Part I by Jim Russell (OPC).

"GREAT WESTERN WAY" by Jack Slinn (HMRS)

"GREAT WESTERN COACHES 1890-1951" by Michael Harris

We have enclosed a simple list of coach numbers with building dates and scrapping dates. A full list of coach numbers is tabled under their Lot Nos. in Great Western Coaches by Michael Harris published by David & Charles.

No.	Built	Lot	Gas Flat F.	Gas Incand.	Cond.
7279	7/92	634	Built	c.1913	12/35
7280	"	"	"	"	-
7281	"	"	"	"	-
7282	"	"	"	"	-
7283	"	"	"	"	-
7284	"	"	"	"	5/36
7285	"	"	"	"	-
7286	"	"	"	"	-
7287	"	"	"	"	3/36
7288	"	"	"	"	4/36
7269	11/92	658	"	"	-
7270	"	"	"	"	9/35
7271	"	"	"	"	-
7272	"	"	"	"	-
7273	"	"	"	"	9/38
7274	"	"	"	"	-
7275	"	"	"	"	-
7276	"	"	"	"	-
7277	"	"	"	"	-
7278	"	"	"	"	-

You will note from the above that these coaches were built without

steam heating. As with the all thirds this would have been fitted around the turn of the century. The flat flame gas lamps fitted from new were replaced around 1912-1915 by the superior gas incandescent. This had a separate pilot supply piped up onto the roof and a shut off valve on the end of the coach.

CONSTRUCTION - GENERAL NOTES.

The assembly of this model is divided into four stages: building the bogies, assembling the body and fitting interior details, building and detailing the clerestory deck, and finally, fitting the underframe and bogies. We recommend that you follow the suggested sequence if only to benifit from the identification of the parts. Many of the details provided are as near to scale as practicable; careful handling of both the components and the finished model will be necessary in order to avoid damage. Indeed, you may wish to omit some of the very fine parts if your model is going to be used on a layout where the models are handled heavily. Whenever possible however, we recommend that you fit all the parts as much effort has gone into the design of the kit in order to make it look as realistic as possible from any viewing angle.

A variety of materials have been utilised in the manufacture of this kit although it is predominantly moulded in polystyrene. Moulded parts should be cut from their sprues with a SHARP craft knife or scalpel; do not attempt to break them off the sprues as the risk of damage is high especially with some of the smaller items. Clean off any ejector pips and/or flash using small needle files - do not use a knife as there is a high risk of removing too great a quantity at a time.

Take a great care with the etched parts as some are very delicate indeed as you will soon find out. They should only be removed from the frets when required as the identification numbers are usually etched into the surrounding waste metal. To remove the parts use a SHARP craft knife or a piercing saw; do not try to break them out or use cutters as the risk of damage is very high. Any remaining pips and ties should be removed using small needle files, and the metal cleaned if required using a small glass fibre burnishing brush. Note that several spare and alternative parts are provided on the etching so do not worry if you have a few parts left over!

Casting should be removed from their sprues using a piercing or razor saw. Do not use cutters as they will probably damage the castings. Resultant pips, etc should be removed using small needle files and/or emery paper.

To construct the model upon, it is well worthwhile investing in a small piece of plate glass - this will help to ensure that all the parts go together squarely and accurately. Use MEKPAk fluid cement to bond plastic parts together, and use an epoxy type (e.g fast setting Aralidite) or one of the slower curing cyanoacyrlic adhesives (e.g.Loctite Multibond) for bonding metal to plastic. Solder is recommended for assembling the etched items although it is conceivable that certain types of glue could be used. Solder, however is far superior!

Before starting the construction of the model please read all through the assembly instructions and study as many photographs of the prototype as you can lay your hands on so as to ensure you get the details correct.

DEAN 6'4" SUSPENSION BOGIE.

Pre-Construction Notes.

We hope you will enjoy building your 7mm scale Dean bogies. The following points are worth remembering. We have endeavoured to produce all parts as near to scale size as possible. Individual pieces may be fragile but the completed unit becomes quite rigid. This perhaps reflects on the sound engineering in Dean's design. Folds should be made only once and then re-enforced with solder. You will notice that the bogies are mounted on a central bolt and cosmetic scroll-irons are provided. This is necessary due to the small radius curves used on many layouts and the practical limitation of scaling down clearances. However, the challenge is there for the ambitious modeller to produce a working suspension bogie.

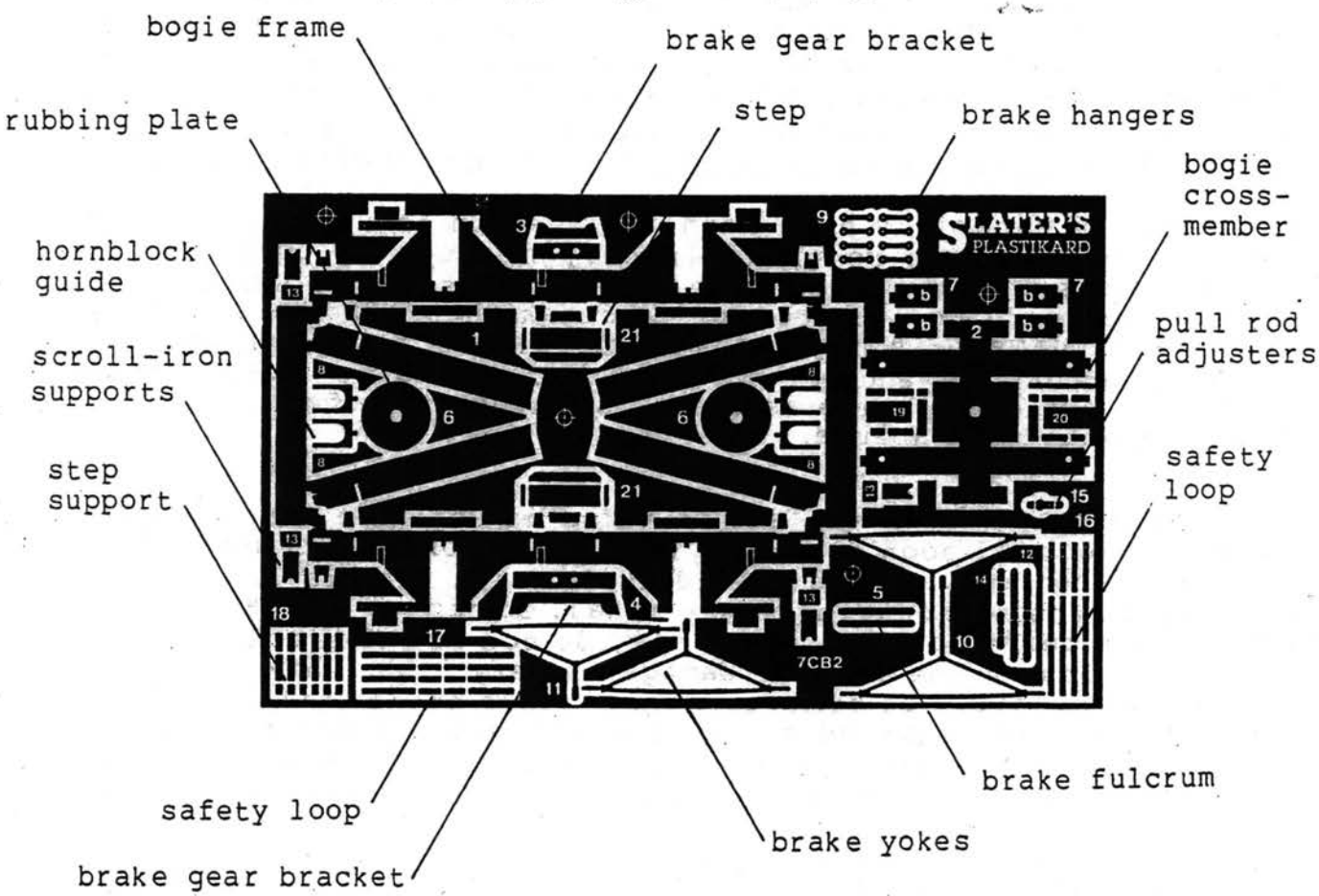

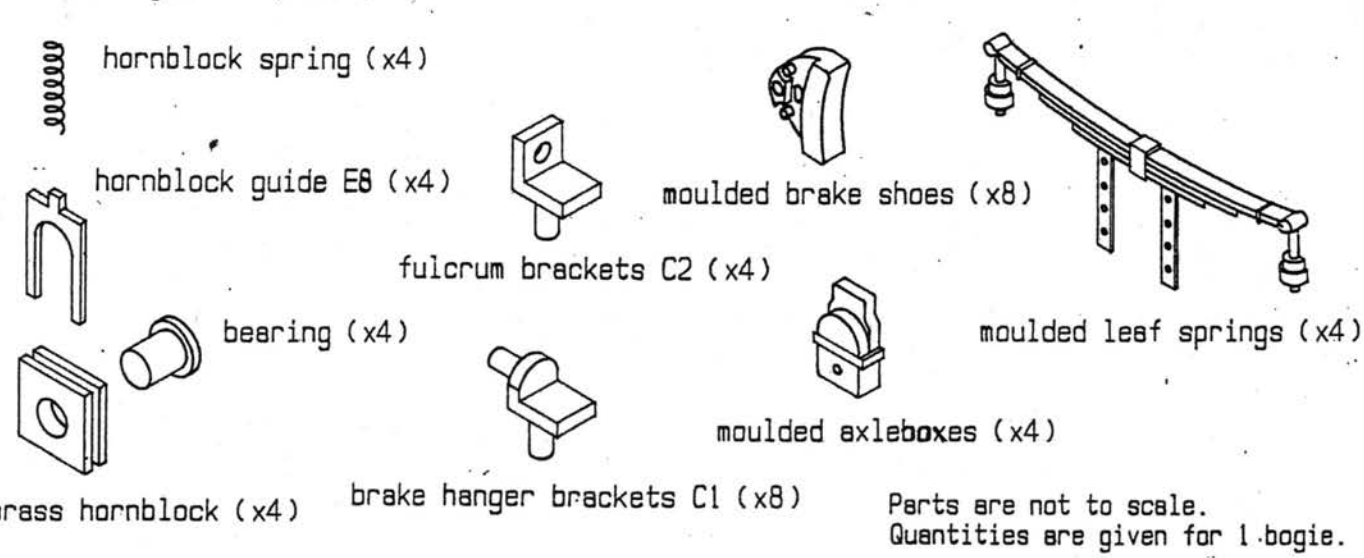

Parts are not to scale.
Quantities are given for 1 bogie.

Carefully read these notes before removing any parts from the fret. The pieces for the bogie are described and given a part number. Remove the etched parts only when prompted to do so. Some small details will be released before required and should be safefully stored.If any part requires a hole drilling this should be done before the part is removed from the fret.

1 Fold the reinforcing piece above each axleguard back through 180 degrees so that they are on the inside face of the bogie frame and solder in place. The 1/2 etch fold should be on the outside. Refer to detail 1. Remove the main bogie frame E1 from the fret and form the rivets in the stays attached to the lower corner of axleguards. Also fold the tabs on the stays through 180 degrees and solder.

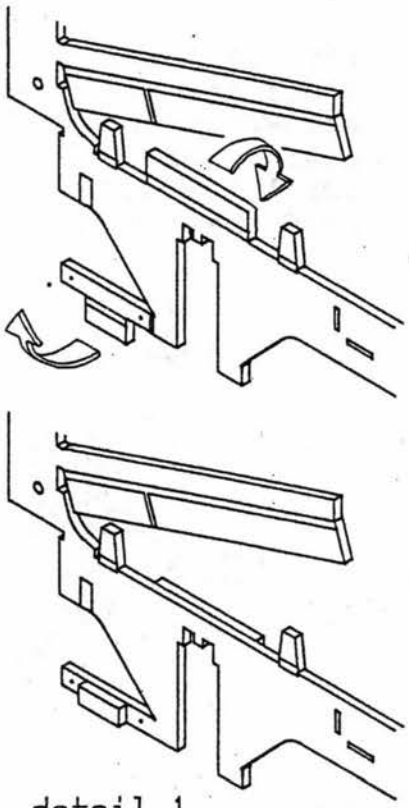

detail 1

2 The four oblique underframe members in E1 are infact (8"x 3.5") L sections so fold them as shown in detail 1b with the fold on the inside. Now fold down the bogie sides,ends and spring stops;the bogie should look like pictorial 1. Add the four pieces (E7) as shown below. These will carry the brake hanger brackets.

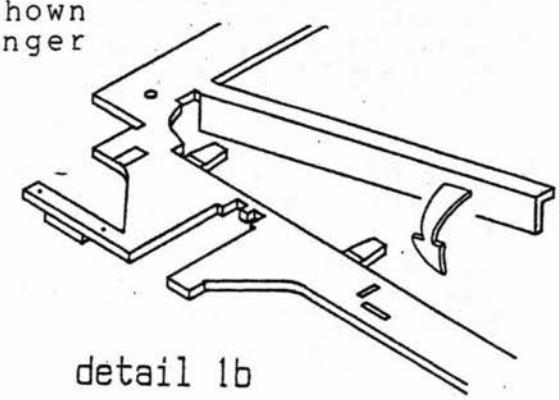

detail 1b

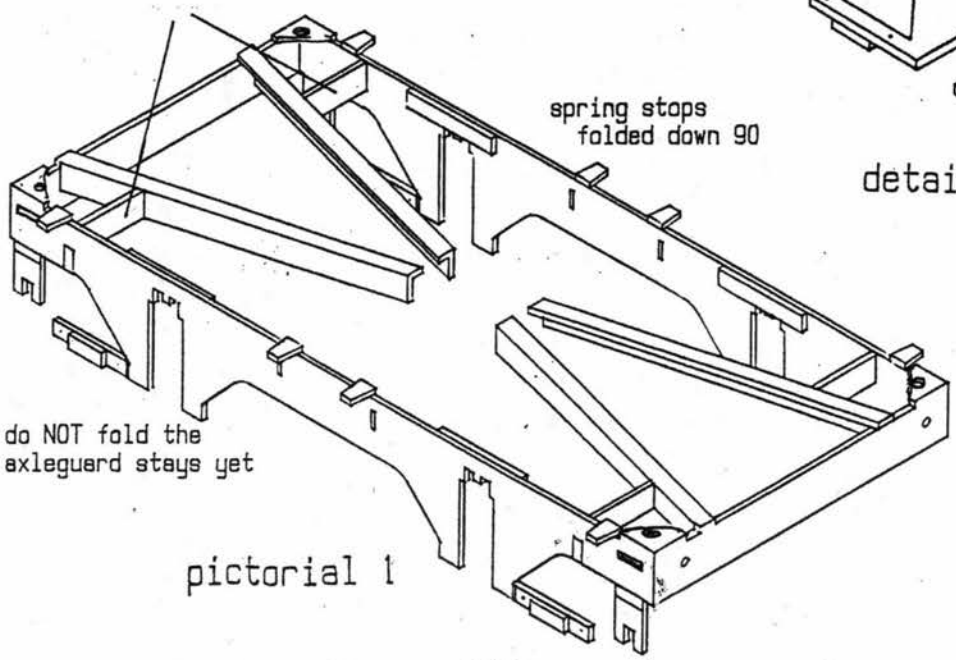

pictorial 1

3 Remove Part E2 and fold in stages, as shown in detail 2, to form the central cross-members. Cast brake hanger brackets C1 should be soldered into the holes in E1 & E2. The correct orientation of C1 is illustrated in pictorial 2. Fit E2 into slots in bogie frames and solder all folds and joints without disturbing the bracket castings. These brake hanger brackets could be left off if you do not wish to add the brake gear detail.

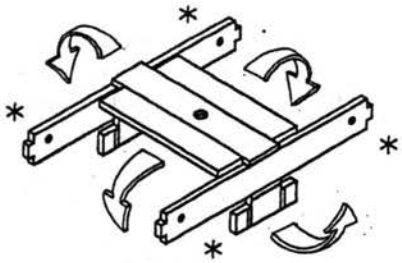

Fit the scroll-iron supports (E13) through the slots at the end of the bogie sides as shown below. The scroll-irons (see detail 40) will need to be cut if the coach is to negotiate small radius curves. The support (E13) will hold the end of the cut scroll-iron.

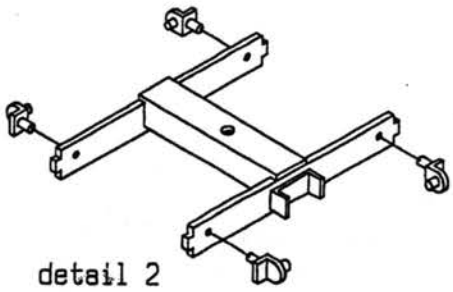

detail 2

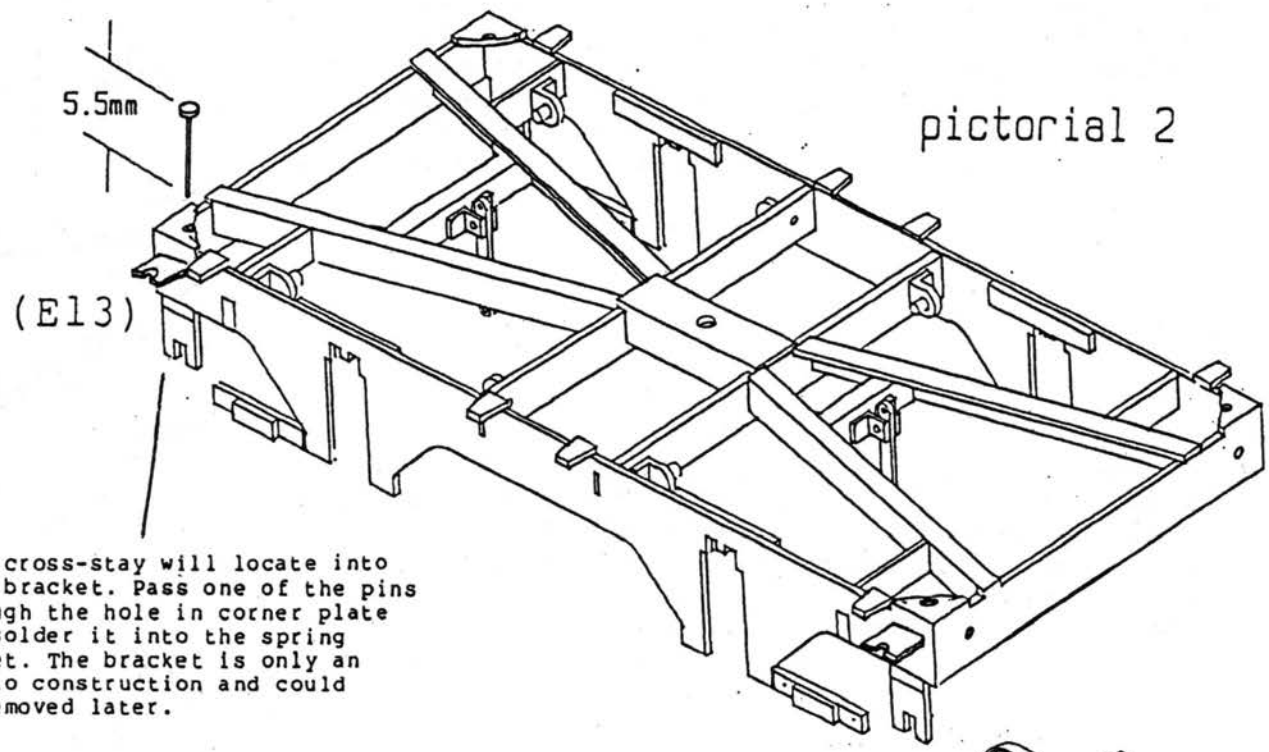

Cast cross-stay will locate into this bracket. Pass one of the pins through the hole in corner plate and solder it into the spring bucket. The bracket is only an aid to construction and could be removed later.

4 Part E3 forms a short cross member between the oblique cross-members and carries a bracket for the brake 'fulcrum'. Fold E3 and add both halves of the bracket (C2 x 2). You should leave 0.020" (thickness of the etched pieces) between the bracket parts and clear the holes with a 0.5mm drill as shown on the right. Do not solder E3 into the bogie yet.

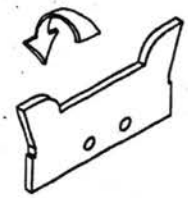

detail 3

Repeat the last step with part E4 adding more bracket halves.

5 Clear the holes in brake fulcrums E5 with a 0.5mm drill and remove them from the fret. Pin fulcrums into the brackets in E3 and E4 using 0.5mm wire. Be sure to use the middle hole of the three holes and allow E5 to rotate freely. Now fit E3 and E4 into the bogie referring back to pictorial 2.

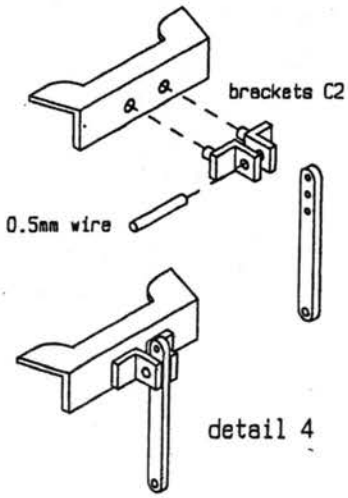

detail 4

Note that E4 (the longer of the two) indicates the end of the bogie nearest to the coach end.

6 Solder one of the rubbing plates E6 onto the top of the bogie frame aligning the pivot holes. Place the bogie upside on your piece of glass and check that the frame is parallel to the glass. Adjust E6 until this is achieved. This will ensure that the coach body will be vertical. Also check that the bogie is 'square', clean and that the tabs on E2 are filed flush with the outside.

7 The wheels should now be fitted into position. Follow the steps, take your time and aim for working clearances with a minimum of play. Note that the spring shown in detail 8 could be omitted and the hornblocks could be locked in place. The resulting (unsprung) bogie will work perfectly well; the choice is yours.

8 Make sure that E8 will slide up and down. You will have to smooth the sliding edges of E8 and the axleguard.

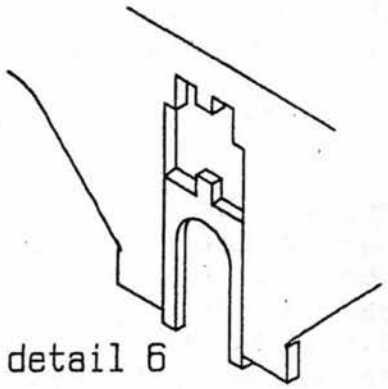

detail 6

9 Push the hornblock onto the guide as far as it will go and make sure it sits square in the bogie. Very carefully 'tack' (with solder or cyano) the lower extensions of E8 to the hornblock making sure that the unit will slide up and down. That was the tricky bit!

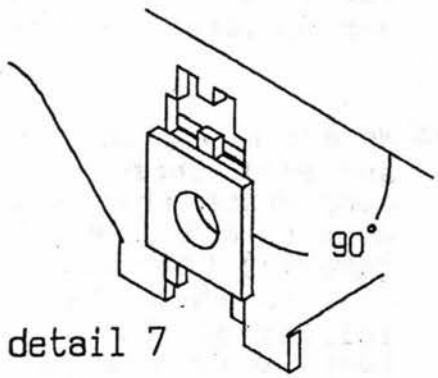

detail 7

10 Slide a brass bearing into each hornblock but don't secure them yet. Place a hornblock/bearing onto the ends of the axle and slide the wheelset into the slot in the bogie sides. Don't fit the spring yet because the wheels will be removed again to paint the bogie. Short strips of masking tape across the bottom of the axleguards will retain the wheels for now.

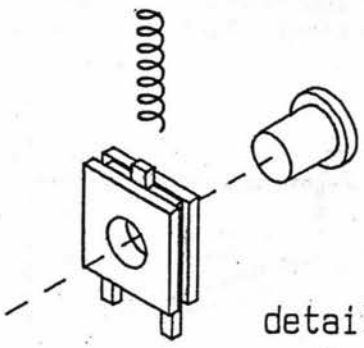

detail 8

You now have an accurate model of a Dean bogie with wheels but lacking brake gear and safety loops. If you do not wish to add further detail remove the wheelsets and skip to step 21. Fit the moulded leaf springs and axleboxes then paint the bogie.

11 Remove the brake hangers (E9) from the fret and open the hole at one end, if necessary, to allow them to fit onto the hanger brackets (C1). Glue the other end of the link over the upper pin on the moulded brake shoe. Detail 9 shows the correct orientation of the parts. Now glue a brake hanger onto the peg on each bracket.

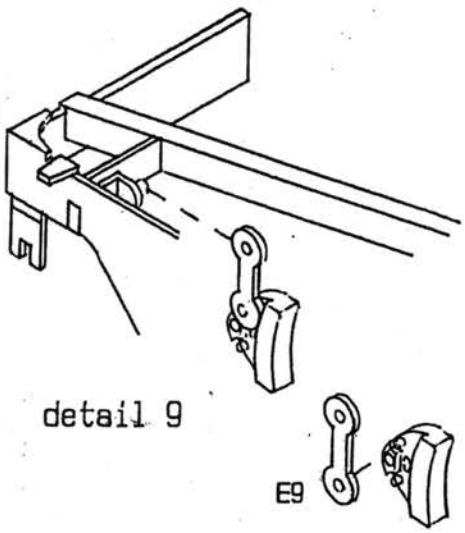

detail 9

12 Remove the long brake yokes (E10) from the fret and twist the end through 90 degrees as shown in detail 10. Keep the twist short and close to the end with the holes. Fit the yokes with their pins in the brake shoes and the other end to the top hole in the fulcrum.

13 Repeat the above with the short yokes (E11) but attach them to the fulcrum at the hole just below the bracket C1. The brake shoes should ideally be backed off approximately 0.015" to allow the wheels to rotate freely. The brake gear components can now be locked in place using solder, or glue where appropriate. The wheels should be removed.

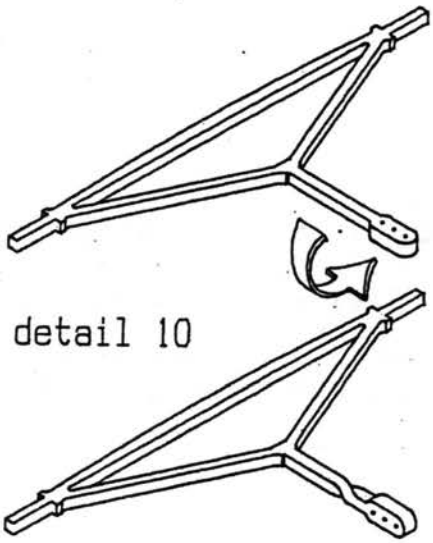

detail 10

twist end 90° as above

14 We are now going to add the safety loops (E16 and E17). These were fitted to catch any brake components that became detached. If you do wish to add rivets to these parts do so before removing from the fret and be careful not to distort them. Refer to detail 11 for the folding of the safety loops (E16). The ends have to be twisted to fit onto the obligue frame-member. Refer to the plan view when fixing them to the bogie.

15

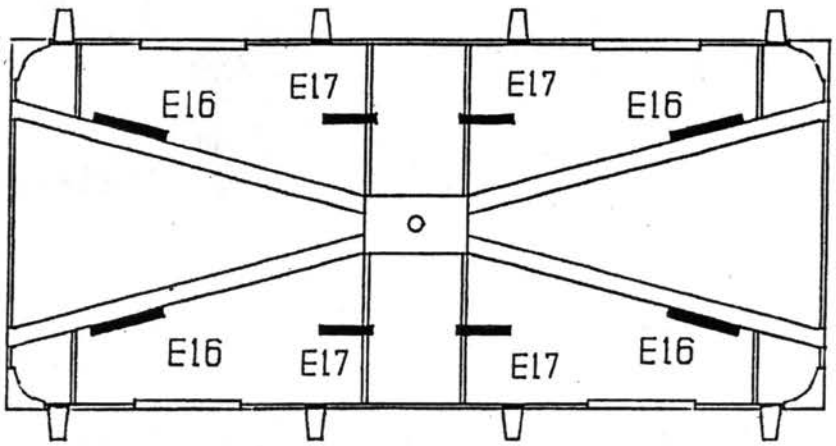

Top view of bogie showing positions for safety loops.

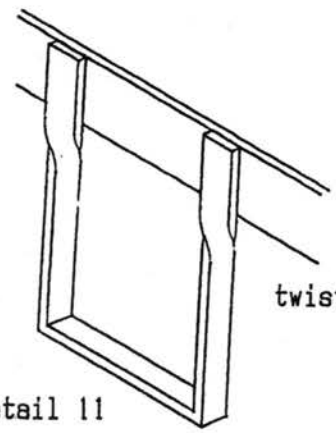

twist end 90°

detail 11

safety loop E16

16 Now fit the loops E17 onto the cross-members. Refer to detail 13 for the correct folding of these parts. E17 is the trickiest loop to form and fit but do persevere!

17 The upper stepboard is carried on supports fitted to the coach solebar. If you wish to fit the lower stepboard (mounted on the bogie) the stepboard supports E18 should be added now.

18 Fold to shape as in detail 14 and reinforce the bends. Solder to the bogie frame (up to 1/2 etched lines). The stepboards will be fitted later.

19 The metal steps (E21) and their supports (E19 & E20) are not required if you are building a vehicle with a lower footboard. It is possible that late in their lives these bogies were fitted with two metal steps (one at each corner of the coach).

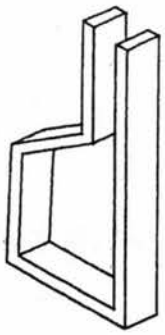

safety loop E18

detail 13

detail 14

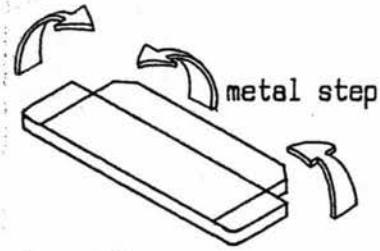

metal step E21

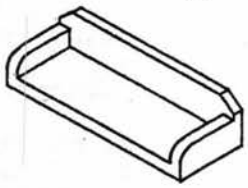

20 Before finally fitting the wheels it is an appropriate time to paint the inside of the bogie. Additional detail will be added to the outside of the frames. Refit the wheels as before but now include the small springs. They locate between the pegs on the hornblocks and the bogie etch. Fold the keeper at the bottom of the axleguard over and solder in place. You could, if you wish, remove the keeper and solder it in place with no fold. It would be easier to remove the wheels later if you did this.

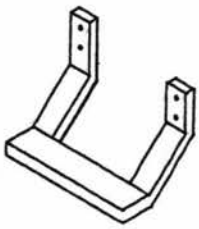

step support

21 Remove the moulded leaf springs from the sprue and try them for size on the bogie. You may need to clear any 'flash' from the inside edge of the wearing plates to allow free movement on the hornblocks. Don't fix them yet!

22 Before you can fit the leaf springs you will need to carefully trim the centre leaf spring hanger. On the prototype the middle hangers were very close together to fit the six foot long leaf springs on the bogie sides.

23 The wheel bearings, which have not been fixed yet, should be adjusted to 'centre' the wheels and allow rotation of the wheels with no sideplay. When you are satisfied that the bogie will roll freely the moulded axleboxes can be added.

The bogie is now complete. The stepboards (if required) and pull rods are added when it is mounted under the coach underframe.

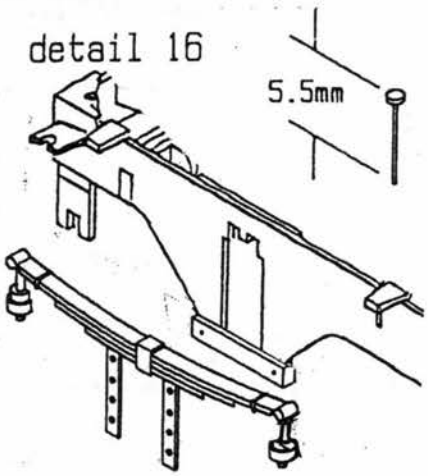

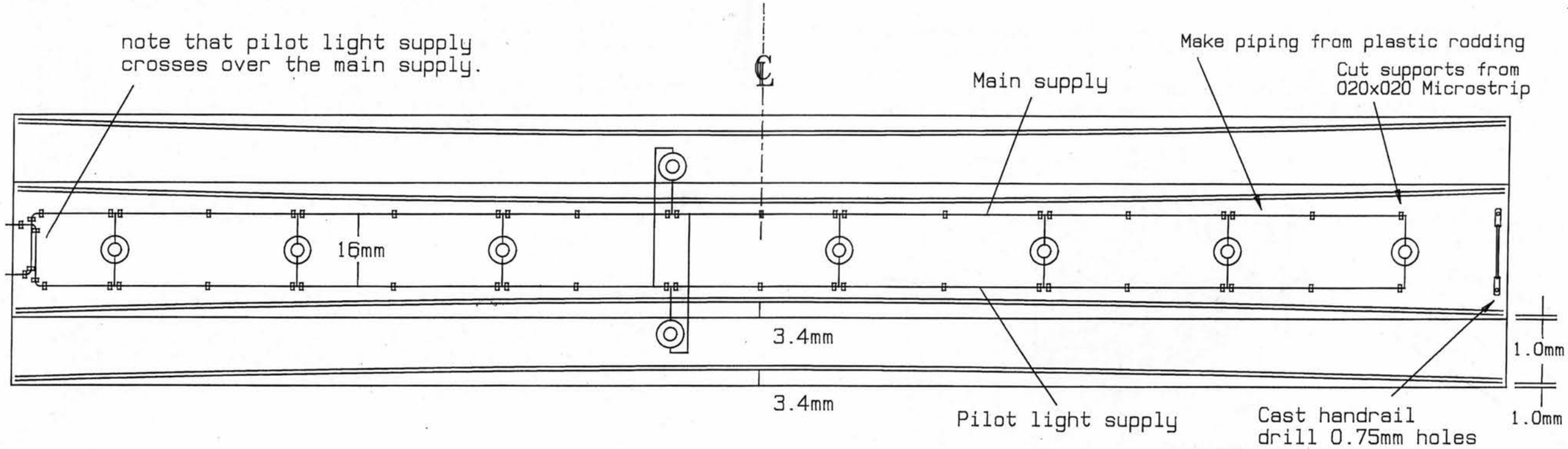

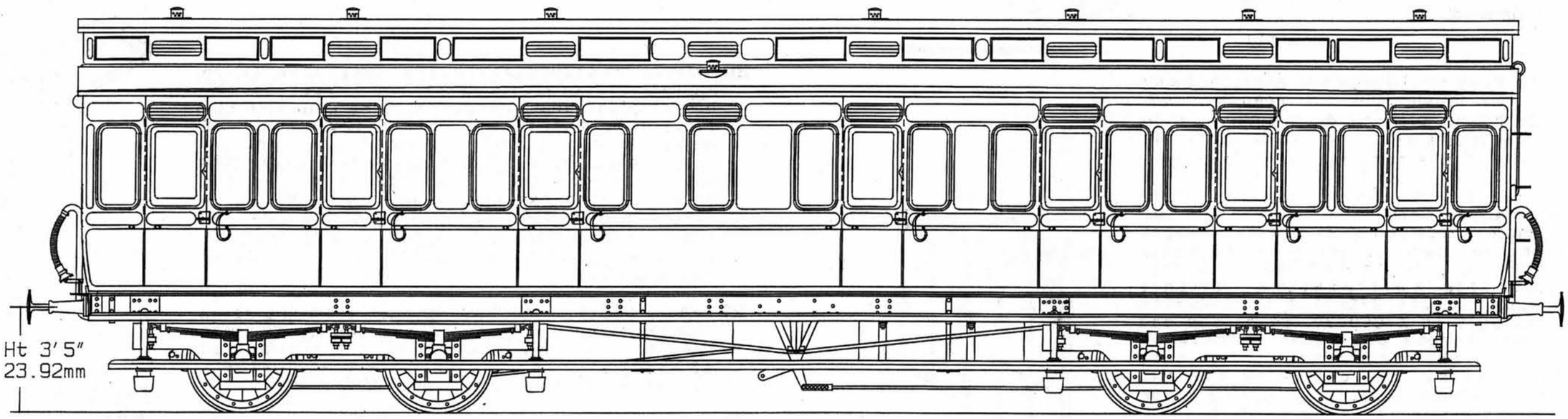

Diagram E37

Non corridor tri-composite with lavatory

Length over mouldings 46" 6.75"

Width over mouldings 8" 0.75"

Coach ends 5 panel turnunder

Bogie centre to centre 29' 8"

Bogie wheelbase 6' 4"

Bogie type Dean Suspension Bogie

Wheel diameter 3" 7" on tread

Gas lighting (supplied from 2 cylinders 7' x 18"dia.)

Built 1892

ASSEMBLING THE COACH BODY.

By now you will have noticed that some of the coach components are moulded in two halves and will need to be joined. This should not present any problems if you first carefully remove any flash from the parts, work on a firm flat surface and check the joined parts with a metal straight edge. We will discuss the joining of the roof halves in more detail later.

Ventilator bonnets fit into panels above the doors.

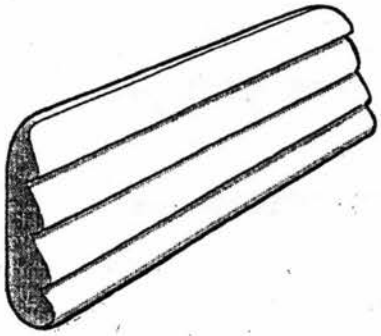

Note that the bottom edge is thicker than the top.

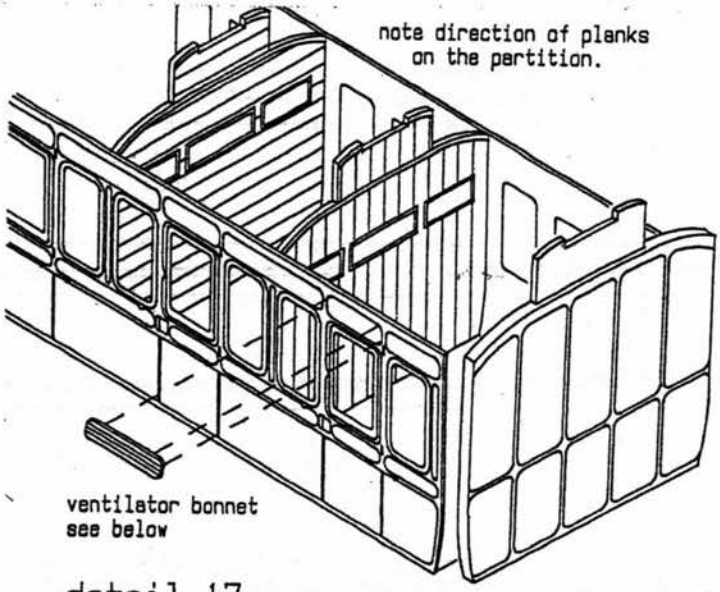

detail 17

24 Take the four side mouldings and clear off any moulding pips or flash with fine needle files. Open out the holes for the door and commode handles with a 0.5mm drill (No.76/0.020") but do not fit any of the castings at this stage.

25 Fit moulded ventilator bonnets into the centre of the panel above each door. There are two types of bonnets and you must use the longer mouldings on the coach sides. Join the sides with the beading aligned and leave to dry. Note that each side is marked with a reference number. Besure to join X7C0901A to X7C0901B and then X7C0901C to X7C0901D. Check the end mouldings and remove any flash. There is nothing to do to the plain (step) end at this stage, but drill out the centre of the two raised vacuum release gear 'lugs' with a 0.5mm drill to take a piece of wire, as detail 18. You could fit the lamp irons, steps, etc at this stage but we do not recommend it as they are rather vulnerable. On the inside of the ends the 'moulding' that runs under the main roof should be trimmed by 0.75mm at each end.

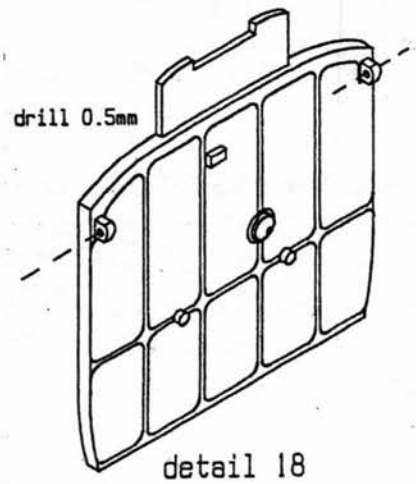

detail 18

26 Asssemble one end to a side on your piece of plate glass. Do make sure that the plain end (end A) which will carry the steps is joined to 'end A' of the side mouldings. If you are in doubt remember that the four compartments are at the step end of the coach. It may be necessary to remove plastic flash from the inside edge of each end to ensure that the panelling on the ends is at the same level as the extreme ends of each side - the ends of the side form the outside verticals of the panelling on each end. Run MEKPAK along the join to weld the two together. Add the other end and then the opposite side to form a box.

Check that all is square and leave to set. Join the two floor mouldings and check that the edges are straight. The ribs that run the length of the floor with gaps will locate the solebars. The raised lateral ribs actually simulate packing pieces that separate the coach body from the underframe. You may like to scribe planking to represent the floor boards 4mm apart and running at 45 degrees to the side. The floor was made in two layers of planking at right angles to each other. Plank lines should be very shallow so as not to distort the floor. Cement the floor in place and check with detail 19.

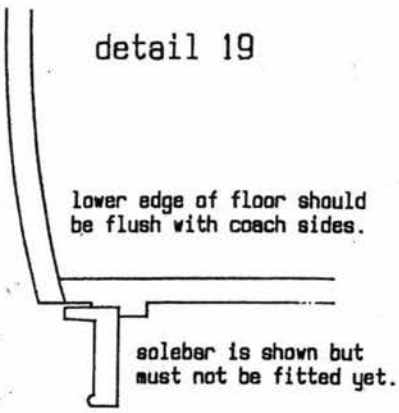

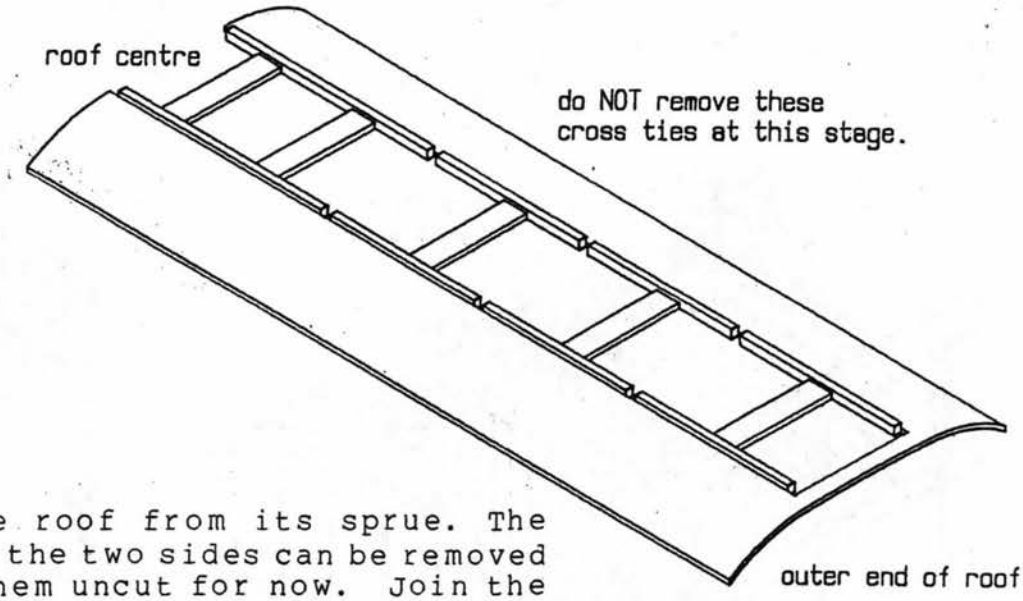

27 Carefully CUT the roof from its sprue. The ties that connect the two sides can be removed later but leave them uncut for now. Join the two halves. Check that the edges are straight and allow it to dry. The edges can be shaped with a file referring to detail 20. At this stage do not drill any holes in the roof. The clerestory roof wil need shaping too so you will refer back to detail 20 again. The partitions can now be added. These were made up of two layers of planks which is why the planks run vertically on one side and horizontally on the other. The two compartments with a door are for the lavatory in the middle of the coach. Besure to put the side with picture frames in the first class compartments. Fit the partitions. In each compartment (except for one end) the planking on the partitions should run in the same direction. Try fitting the roof down over the partitions. They should be adjusted to allow them to fit into the notches in the roof. Note that several of the notches are not used.

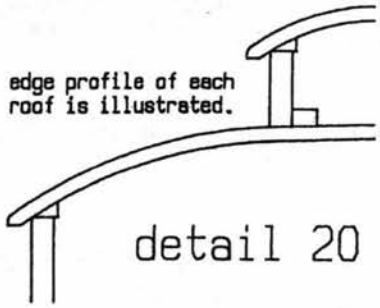

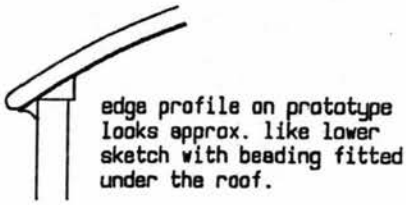

28 Seats can be assembled and fixed in the compartments. To produce 3rd class seating the 'seat' portion must be cut along the notch on the underside. As supplied they make deeper 1st class seats. In the 1st class compartments either side of the lavatory the seat is cut to clear the door. A pair of seat ends are included with the partition. Also, add arm rests to divide the other seat into three.

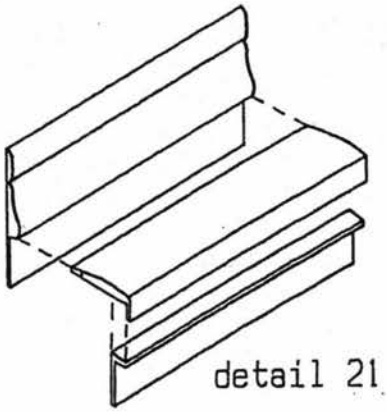

29 If you wish to add etched luggage racks they should be soldered to their baseplates and glued to the partitions in between each picture frame. A thin piece of wire should be soldered across the tops but no netting is supplied. Two types of rack are supplied, the longer ones are for first class compartments, the shorter for second and third class.

detail 22

30 It is a good idea to paint the inside of the vehicle at this stage as it will become inaccessible later. Any detail that you wish to incorporate should also be added at this stage. Some information on interior finishing can be found at the bottom of this page.

31 Cut to length the 12mm strips of Plastikard and fit along the top of the partitions. These should be joined at a partition and not extend beyond the coach ends.

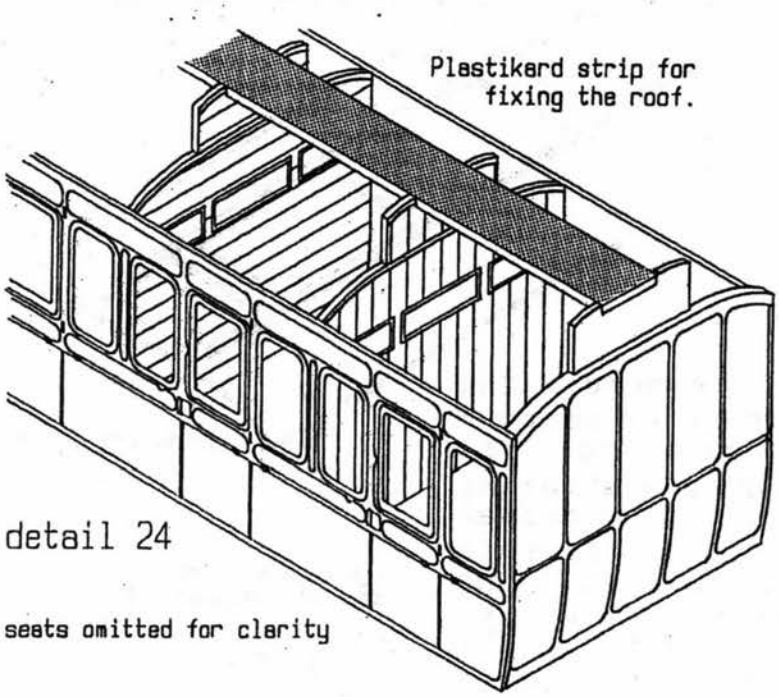

detail 24

seats omitted for clarity

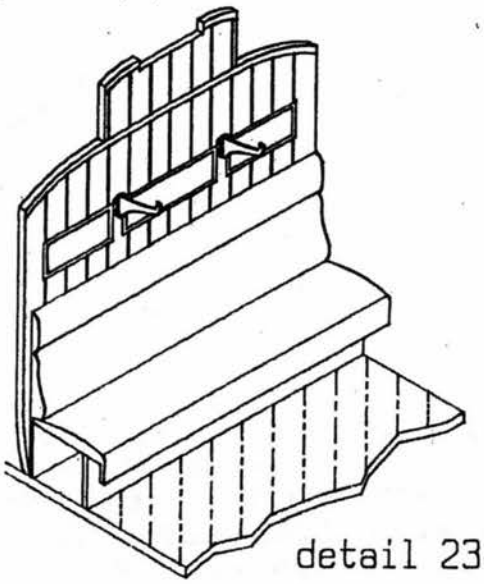

detail 23

typical compartment with scribed planking on floor, seats and luggage racks.

32 Remove the clerestory sides from the underframe sprue and fit the remaining ventilator bonnets. Note that the 'windows' need glazing with strips of the supplied Plastiglaz. After circa. 1914 these windows were painted over so you could use an opaque plastikard 0.010" thick. The sides should now be joined together and allowed to set.

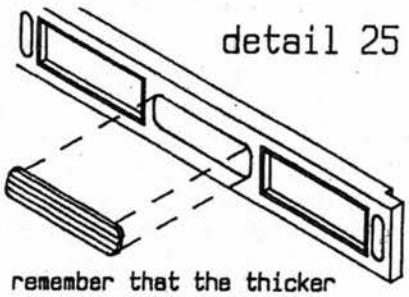

detail 25

remember that the thicker edge is at the bottom.

"Great Western Way" contains a good summary of the interior finishing for the various periods and we suggest that you refer to this for detailed information. Basically, however, the interior woodwork was left varnished (oak, mahogany, and walnut were used) and up to about 1911 the first class seats were in dark green leather, second class in brown moquette, and third class in red rep. After this time green cloth was used in first class compartments and dark blue rep in third class. Later on brown or chocolate cloth was used in first class and red material in third class compartments. These, however, were the colours adopted for new construction and it would appear somewhat unlikely that all the upholstery in older vehicles would have been changed.

33 Glue the clerestory sides and ends onto the main roof fitting the sides to the locating rib. Besure to get them the right way around. The vents line up with those on the coach side. The amount of roof showing at each end should be the same. The ends of the clerestory sides form the vertical beading on the end mouldings. Leave the clerestory deck to dry while we prepare the details for the roof.

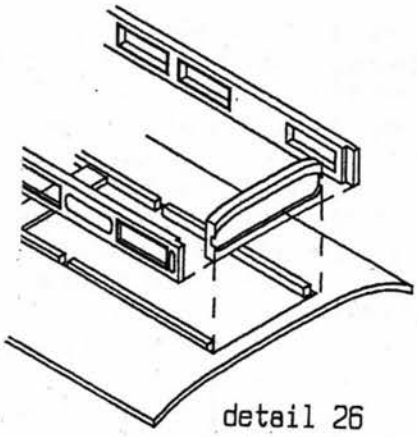

detail 26

34 Join the clerestory roof parts, with handrail positions to the ends. Refer to detail 20 to profile the edges. Attention should be given to the join in the roof as imperfections here would be obvious to the casual observer. Carefully file the join and finish with 'wet and dry' paper. Hold the paper on a 'sanding block' and work from 600 grade to 1200. You may wish to cover the roof with 'tissue' canvas. We refer you to a comprehensive article by Patrick Reardon Model Railway Journal No.24 1988 pages 199-204.

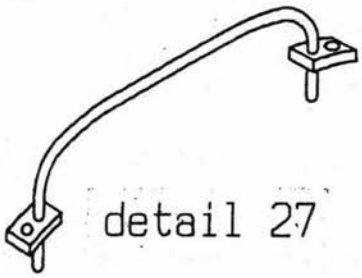

detail 27

handrail fitted at one end of roof.

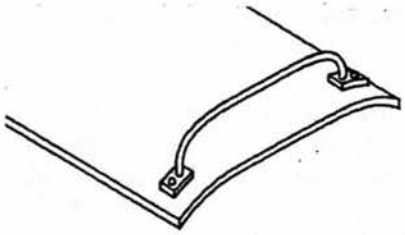

Positions are marked on the underside of the clerestory roof for lamp tops and the handrail. Clear two holes at ONE END ONLY for a cast handrail and fix it in place. When the roof is in position this MUST be at the step end of the coach. Drill lamp positions with a 2.5mm drill (No.40/0.098") for the spigot on each cast lamptop. Hold the roof with the handrail to the top. Carefully drill ONLY those holes indicated by lettering that is the right way up. The clerestory roof can be fixed to the clerestory sides. The cross-ties in the main roof should be cut away.

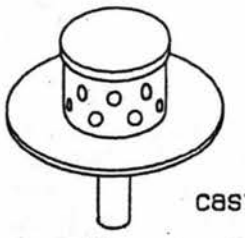

cast lamp top

detail 28

35 Lengths of plastic rodding can be fitted around the base of the clerestory sides and ends to form beading. This is in fact a 'quadrant' moulding but the round rod looks quite effective.

36 Fit the roof onto the body and mark the lamp positions through the roof onto the bracing strip. Drill the holes 1.78mm (No.50/0.070"). The roof is arranged so that the lamptops can be screwed into this strip to hold the roof, making it removable. Note that there are TWO lavatory lamptops that must be fitted in the main roof towards the end WITHOUT steps. If you wish, the roof can be glued in place after glazing, the choice is yours. You must drill a small hole in the floor of each compartment to allow for changes in air pressure.

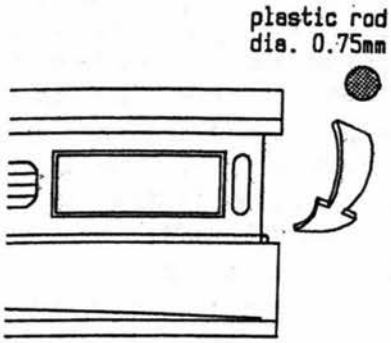

detail 29

37 Rainstrips are formed from 0.030" x 0.030" microstrip and should now be added. Mark the positions of the ends and middle of each strip following the diagram on pages 11 & 12. Take care to get an even curve along the roof as it is so noticeable on the finished model.

38 You may wish to fit the piping to the gas lamps. Information is given on pages 11/12 and detail 30. If you rely on the screwing down of the lamptops to hold the roof in place you will have to cut the piping before it runs into the lamptops. You will also need to 'break' the piping before it runs down the end of the coach. We are unsure about the piping to the lavatory lamptops. Page 11 shows one possibility. Do try and fit piping to the roof; it adds to the appearance of the model.

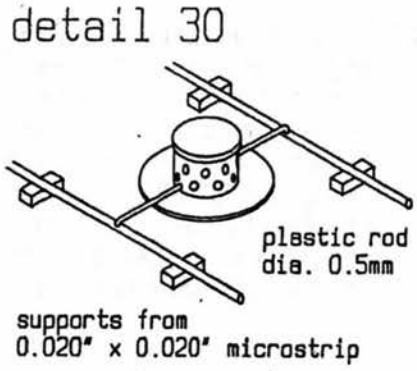

39 Destination board brackets, (31 on X7C0403) can now be made up if you wish. You will find them on the small fret with other details for the coach end. The brackets should be bent over to a "U" shape so as to form a thin recess for the boards themselves (E30). It is thought that they were fitted onto the eaves panels near the end of the sides.

ASSEMBLING THE UNDERFRAME.

40 Take the two end sections of the coach underframe and remove any moulding pips or flash. You will need the pair of 8BA nuts and bolts. The bolt fits into the hole from the top and the nut is 'captive' in the round recess. The bogies will pivot on the bolts and be retained by the remaining nuts.

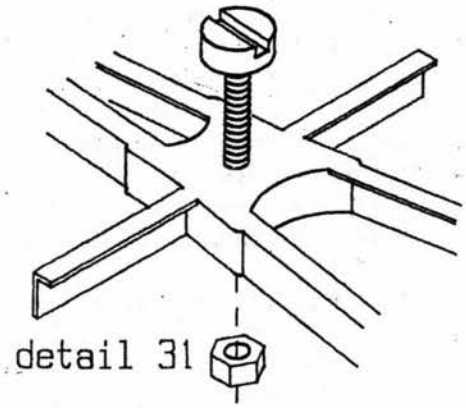

41 You should also fix the racking plates E19 & E20 onto the underside of the body at each end as in detail 32. Note that the centre 'end stop' should be folded up so that it touches the coach end. The racking plate with steps (E19) MUST be fitted at the plain (step) end of the coach!

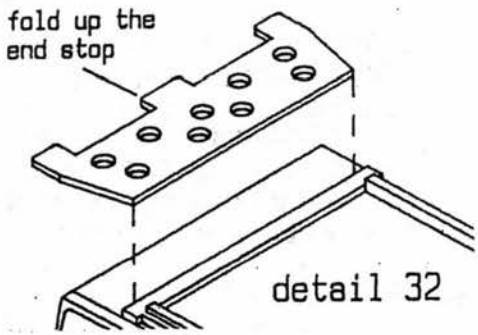

42 Cut the solebars from their sprues and clear the step hanger and scroll-iron holes with a 0.75mm drill (No.69/0.020"). You will also need the centre section of the underframe. Support the coach body with the step end on the left and position the underframe mouldings onto the underside of the body. The end mouldings locate in the holes at the bogie centres and the centre section fits (after trimming if necessary) between them with the post for the vacuum cylinder towards you. Now add the solebar sections with the 'bulb' moulding on the lower edge as detail 33 and the underframe crossmembers between their locating lugs.

43 Fit the headstocks with their longer flanges up against the racking plates. The front faces of the headstock should be flush with the lower edge of the coach ends with the etched racking plate creating a 0.010" gap. The turned buffer guides fit into the holes in the headstock and the buffer rams and springs are retained with the small etched clips. The buffers maybe easier to fit prior to glueing the headstock in place and there is no reason why this should not be done.

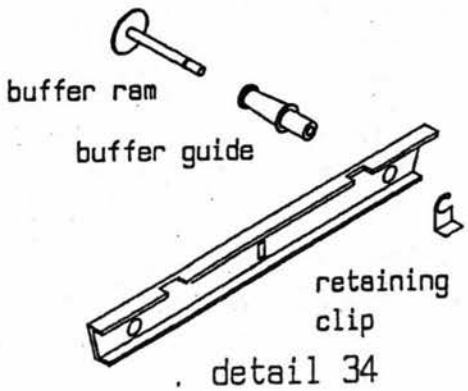

44 Assemble the vacuum cylinder and drill the two lugs on the bottom plate 0.5mm (No.76/0.020"). Pass a length of 0.5mm wire through the holes but do not glue yet. Fit lengths of 0.75mm plastic rod on either side of the cylinder in the four lugs and trim flush. Fix the vacuum cylinder onto the peg on the underframe.

45 Glue together the gas cylinders and add the ends. The cylinders have a cast valve in one end which should point towards the vacuum cylinder. Cylinder supports fit onto crossmembers with the centre to centre spacing of the cylinders at 25mm. The cylinders should be nearer to the step end of the coach.

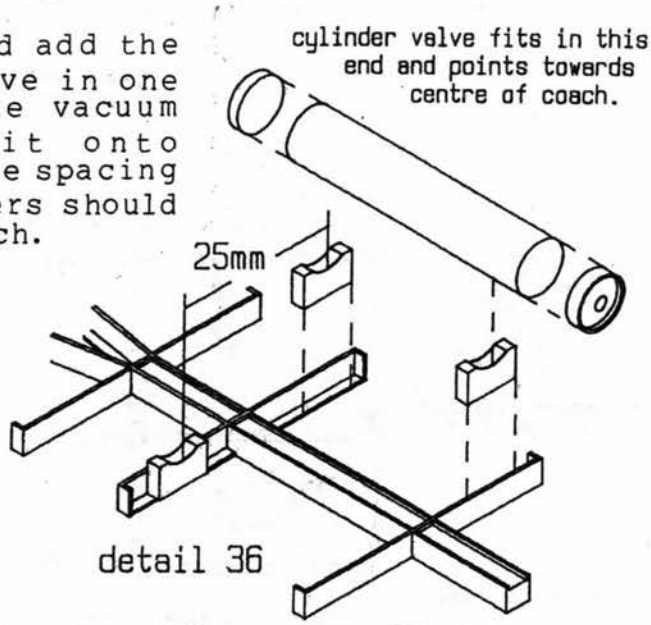

detail 36

46 Remove vee hangers (E21 & E22) from the fret and fit one (E21) over the lug on the central underframe member. The other is fitted onto the rear face of the solebar on the same side as the vacuum cylinder. You could also carefully remove four rivet heads from the opposite solebar at this point. Thread a length of 1mm wire through the vee hangers also threading on the operating levers (E24) and arm (E24A). The operating arm MUST be towards the centre of the chassis as detail 37. Connect the two operating levers to the wire protruding either side of the operating cylinder and secure with a quick touch of the soldering iron or a drop of glue. Leave the operating arm free at this stage.

detail 37

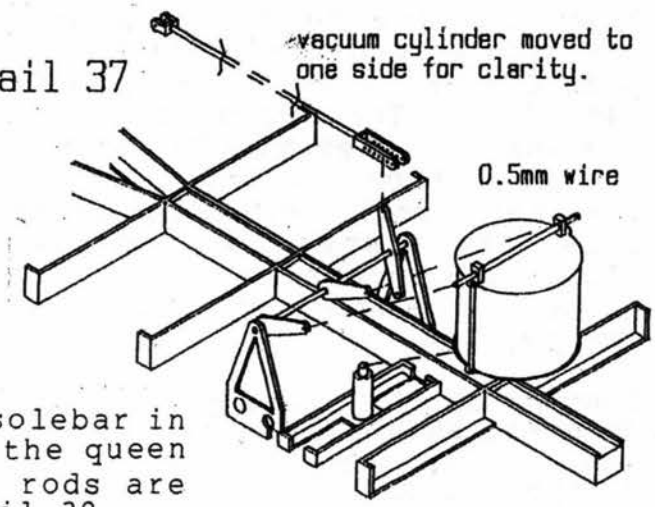

solebars omitted for clarity

47 Fix queen posts to the back of the solebar in the centre of the vee hanger. Bend the queen post back to clear the vee. Truss rods are formed out of 0.75mm wire as as detail 38.

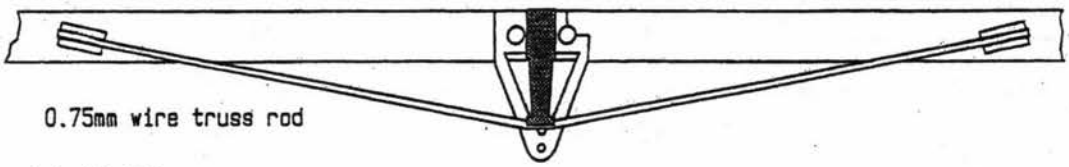

detail 38

48 The ends should now be detailed and the drawing below explains where the various pieces fit. The etched steps (E25 & E26) are rather vulnerable and would benefit from having a short length of wire soldered to their rear face to form a fixing peg . Also take care with the lamp irons (No.34 on X7C403) as they are rather delicate. The pipe from the vacuum release box should be formed from fuse wire and connected to the top of the vacuum pipe to represent the vacuum release gear.

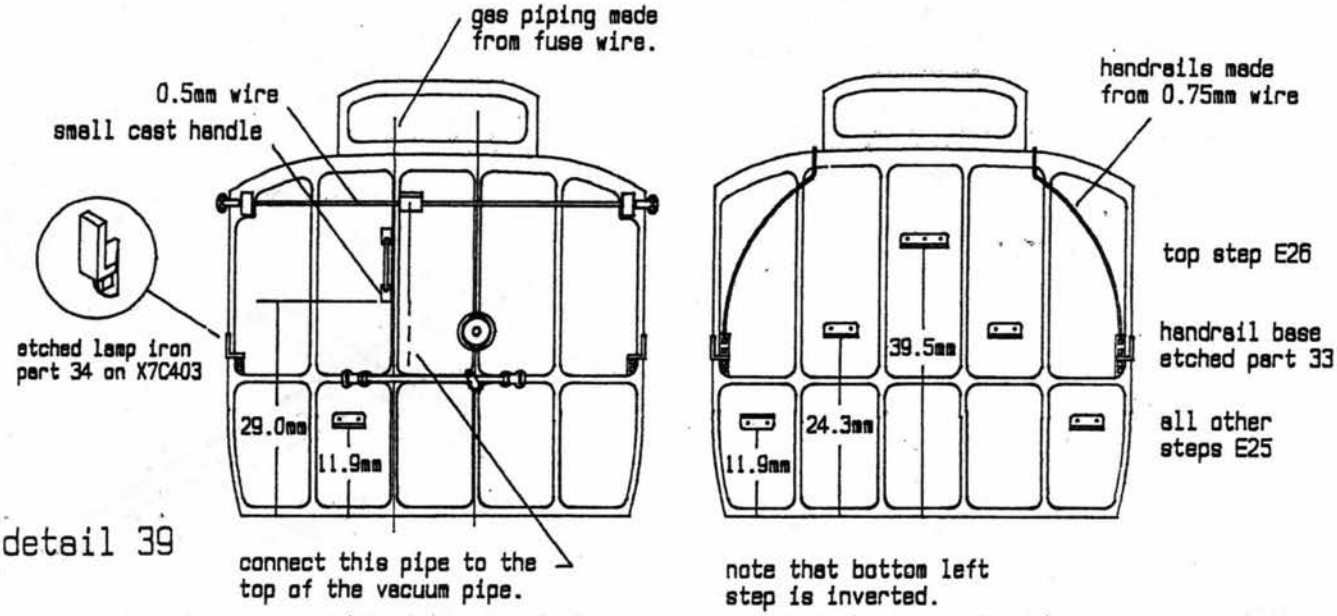

detail 39

49 Remove the scroll-irons from the sprue and solder a 14BA bolt into the hole in the leg. Cut the head off the bolt and check that the bolt passes through the outer hole in the cast cross-stay, as detail 41. Fit the scroll-irons into the solebars and allow to set.

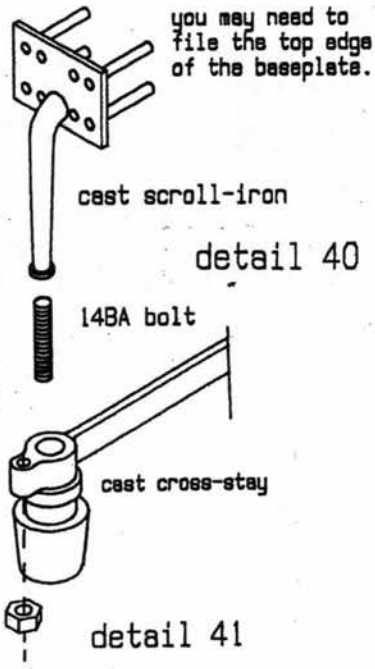

detail 40

detail 41

50 Slip an etched rubbing plate (E6) onto the bogie pivot bolts and fit the bogies. Place the coach on the track. The correct distance from rail top to buffer centre is 23.92mm. This can be achieved with plastikard packing pieces between the rubbing plates E6 and the underframe. The bogies can be retained with the 8BA nut. They should rotate freely but be prevented from rocking. Fit the cross-stays onto the scroll-iron bolts and retain with the nuts. The suspension rods (pins shown in detail 16) locate in the hole in each corner plate of the bogie and locate into the volute spring cups.

51 Connect up the brake pull rods using the 0.75mm wire supplied. Each end should be fitted with an etched adjuster (E12) and a pull rod linkage (E15). Remember that as the vacuum was released the cylinder dropped and the brakes were released. Don't secure the pull rods to the operating arm at this stage.

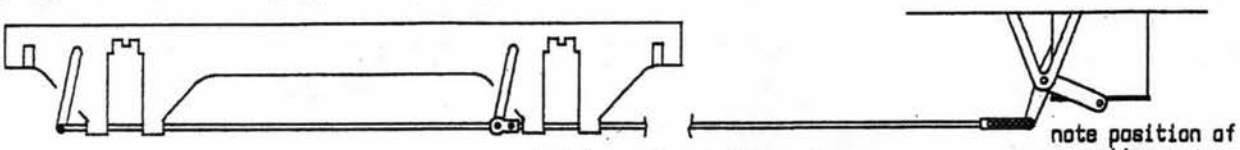

detail 42 0.75mm wire pull rod

52 Finally, let's look at the fitting of the footboards. There are four long hangers on each solebar and a short hanger above the bogies. Fix the hangers to the solebars noting that the pins on the end hangers should be cut short to ensure that they don't protrude beyond the rear face of the solebar and so foul the buffer spring. If you are modelling the coach after the 1920's the centre section of lower stepboard may have been removed, so the hangers should be cut down.

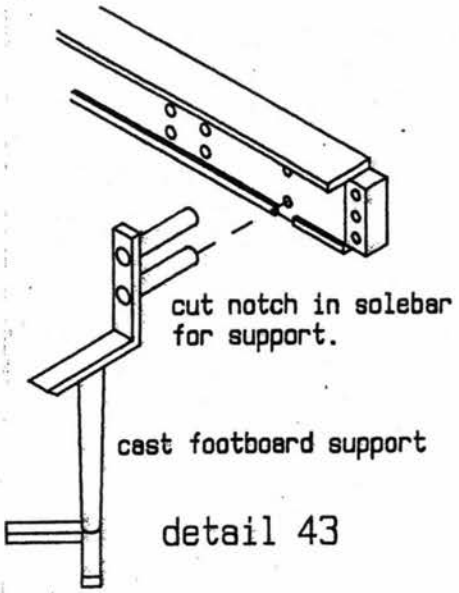

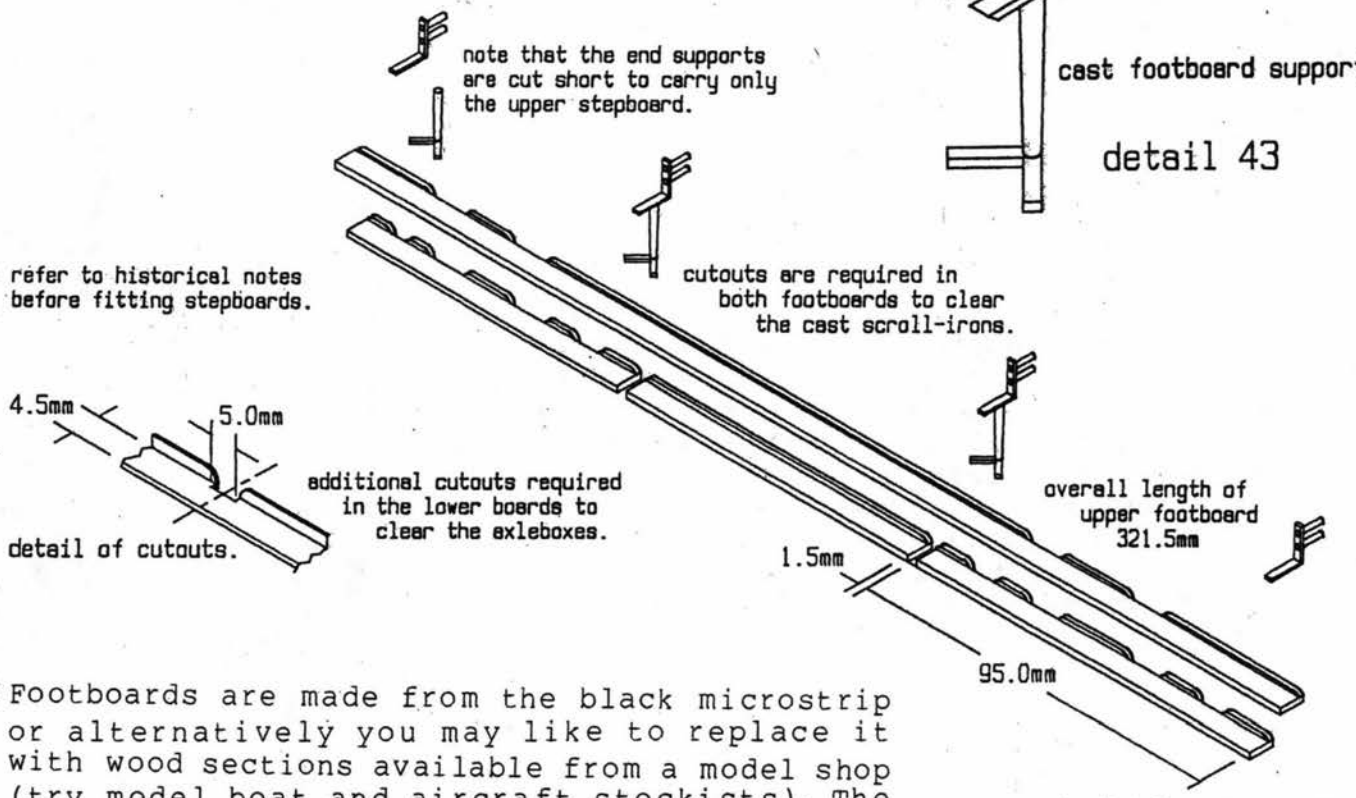

53 Footboards are made from the black microstrip or alternatively you may like to replace it with wood sections available from a model shop (try model boat and aircraft stockists). The narrow microstrip is for the vertical 'upstand' at the rear edge of the step.

If you study the sketch you will see that the upper and lower boards are of a different width and height. Assembly of the footboards is best done on a piece of glass with the vertical upstands butted up to a metal straight edge. Tape the tread in position, join them with MEKPAK and leave to set. Try to stagger the joins in the microstrip for greater strength. We are grateful to Model Railway Journal for the use of their drawing.

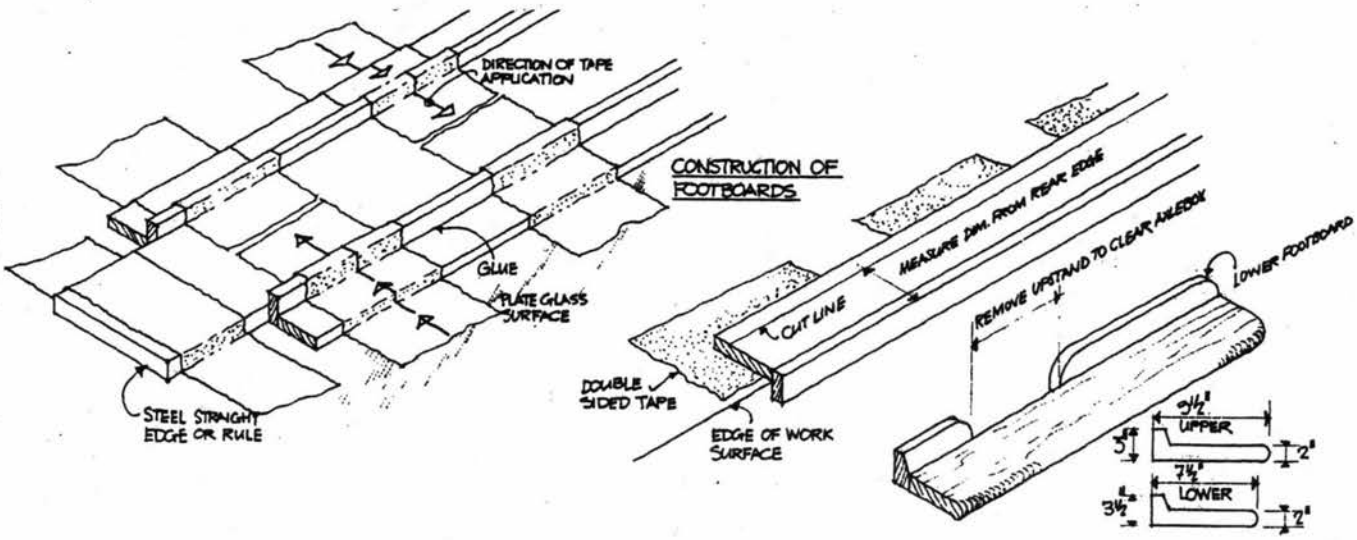

54 The model can now be painted and some basic livery notes are given on the back page. It is advisable to remove the bogies and roof first. Fit the cast commode handles and door handles after first filing and polishing them. Secure them with cyano being careful not to damage the paintwork. Fix a vacuum pipe to each end of the chassis just to the left of centre. Fit a connector into one end of the vacuum pipe spring and push the spring over the top end of the pipe. The pipes will look most realistic in a train of vehicles as they can be easily coupled and uncoupled.

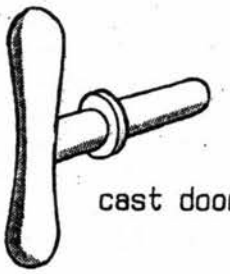

detail 44

detail 45

cast vacuum pipe

55 The buffers may have been fitted earlier, if not, add them now. The moulded buffer spring lugs should be glued to the end cross-member slightly nearer to the centre line of the coach than the buffers. the springs and fit them against the lugs; they should take on an 'S' shape. Remove the roof and glaze each compartment with the clear plastic taking care not to frost the glazing with solvent.

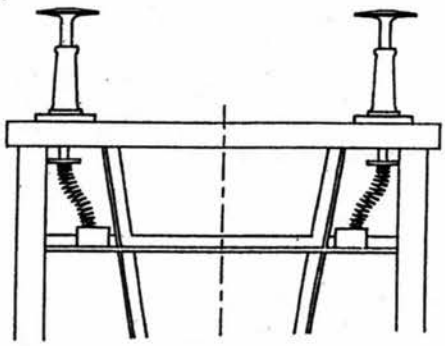

detail 46

56 Carefully bend the end handrails to shape. These are tricky and reject any unsatisfactory attempts. We suggest that you glue the rail into the holes in the end only and spring them into the holes in the roof in which case you will be able to remove the roof if you wish.

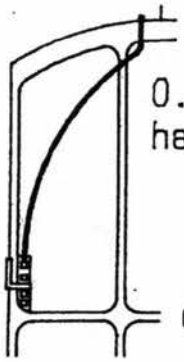

detail 47

57 Etched hooks (E27 & E28) are supplied for the safety chains on the headstocks. You will need chain with approximately 14 links per inch. Model boat shops may carry this size. The hooks should be 14mm apart on either side of the coupling.

58 You are left with two gas gauges and gas filler valves. We confess to be being unable to give you an exact position for these components except to suggest that the filler valves are positioned below the solebar in line with the end of the cylinder gas valve and the gauge is mounted directly above the filler valve.

LIVERIES.

There were several distinct livery styles adopted by the Great Western Railway according to the period in question. These styles are dealt with in "Great Western Way" by J.N.Slinn (published by the HMRS,1978) and "Great Western Coaches" by Michael Harris (published by David & Charles,1966 and subsequently reprinted).

Up to 1908
The bodywork was painted in "Windsor Brown" except the panels above the waist which were in creamy white. Clerestory sides were also Windsor Brown and the small panels between the windows picked out in cream. All of the ventilator bonnets on the coach were painted brown with individual louvres shaded to cream at the bottom. During this period the ends and solebars were also painted brown. Ironwork beneath the solebars was black. Droplight frames in the doors and the bolection mouldings were left in varnished wood (mahogany). All the beading was painted black and the roof was white (which would soon weather to very "off white") although some photographs show the lower rainstrip and the area below it to be brown.Lining is somewhat complex to describe and you are best referred to "Great Western Way" or "Great Western Coaches". Essentially this consisted of a fine gold line down each edge of the panelling and a very fine brown line just inside the cream panels. The carriage number would be in the eaves panels and in gold lettering shaded black. Class designations appeared in the waist panel on each door also in gold letters shaded black. The monogram was applied to the lower panels and usually appeared twice per side.
In 1907 a few alternations were made to the livery style and the ends were now painted black. The numbers were moved to the waist panels and a garter totem replaced the monogram.

1908 to 1912.
For repaints and new coaches the two colour livery was (temporarily) abandoned and replaced by all over chocolate described as being of a warmer shade than the previous colour (possibly due to a different type of varnish?). The ends were black and the roof as before but the panelling was no longer painted black. Lining was much the same but it is believed that for a time yellow replaced the gold.

1912 to 1922.
Again the change in style was not particularly dramatic except that the basic colour was changed to lake colour which now included bolection mouldings and droplight frames. The ends and all below the solebars were black. The lining was still in gold.

1922 onwards.
The chocolate and cream livery was reinstated in a slightly simpler form than before with black ends and gold lining. The clerestory sides (including panels) were brown and the windows were painted over. From about 1924 the lining was further simplified with only the waist and lower panels being lined, and from 1927/8 the lining was virtually swept away altogether there now being just a single gold/black line dividing the chocolate and the cream (panelling now not being painted black).

From this time onwards not many carriages survived long enough to be repainted again and anyway there would have been repairs to the panelling giving the carriages a somewhat decrepit appearance! Photographs are the best guide as to how you should paint your model so please consult all you can find. It appears that those that did ended up being painted brown all over with no lining.

7C09 CHECK LIST

				CHECK
ETCHINGS	AS PACKED		X 1	
CASTINGS	AS PACKED		X 1	
7124G	WHEELS		X 4 AXLES	
7154	BEARINGS		X 8	
71564	BUFFER SET		X 1	
7163	VAC SPRINGS		X 2	
X715442	HORNBLOCKS		X 8	
7MM	WAGON BUFFER SPRINGS		X 8	
14BA	BRASS CHEESEHEAD SCREWS		X 8	
14BA	BRASS NUTS		X 8	
8BA	BRASS CHEESEHEAD SCREWS		X 2	
8BA	STEEL NUTS		X 4	
1/2"	BRASS PINS		X 8	
8" X 1"	PLASTIGLAZE		X 4	
60 THOU	PLASTIKARD	(ROOF SUPPORTS)	X 2	
20 X 20	MICROSTRIP	10"	X 3	
30 X 30	MICROSTRIP	10"	X 9	
40 X 69	MICROSTRIP	10"	X 4	
40 X 80	MICROSTRIP	10"	X 4	
40 X 132	MICROSTRIP	10"	X 4	
40 X 178	MICROSTRIP	10"	X 4	
20 THOU	BRASS WIRE	12"	X 1	
30 THOU	BRASS WIRE	12"	X 4	
40 THOU	BRASS WIRE	2"	X 1	
20 THOU	RODDING	10"	X 4	
30 THOU	RODDING	10"	X 6	
MOULDINGS				
7C09	SIDE A		X 1	
7C09	SIDE B		X 1	
7C09	SIDE C		X 1	
7C09	SIDE D		X 1	
X7C0905	PARTITIONS		X 2	
X7C0906	UNDERFRAME ENDS		X 2	
X7C0913	MAIN ROOF		X 2	
X7C0915	CLERESTORY ROOF		X 2	
X7C0802	ENDS		X 1	
X7C0803	MAIN UNDERFRAME		X 1	
X7C0805	PARTITIONS		X 5	
X7C0808	VENTS	BROWN	X 2	
X7C0814	FLOOR		X 2	
X7C0408	VENTS	FAUN	X 2	
7203	COACH SEATS		X 7	
7204	ARM RESTS		X 1	
7CB2	SPRINGS		X 2	
	INSTRUCTIONS			
	CHECK LIST			
	CUSTOMER RESPONSE FORM			