SLATER'S
COACH KITS

DEAN NON-CORRIDOR ALL THIRD

Diagram C10

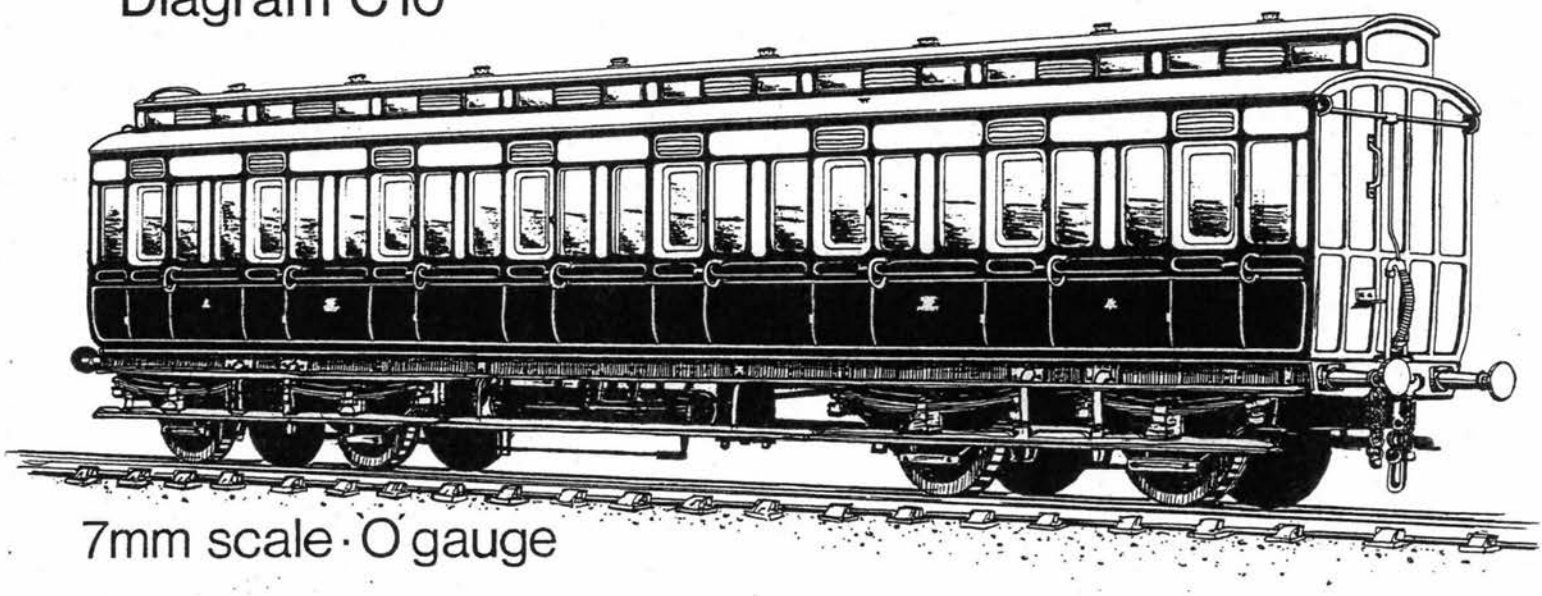

7mm scale · 'O' gauge

reference 7C08

ASSEMBLY INSTRUCTIONS for 7mm scale · 'O' gauge

CONTENTS

DEAN PERIOD NON-CORRIDOR CLERESTORY BOGIE COACH.

G.W.R. DIAGRAM C10.

There are three parts to these instructions - first some background historical information, then the assembly steps with diagrams and finally, some livery notes.

HISTORICAL NOTES.

To understand the history of this type of vehicle it is necessary to consider two other diagrams, namely the C3 and C22. All three were designated for third class (hence the C) and were intended for express traffic but relegation to secondary work came quicker than perhaps had been envisaged. They were all non-corridor and mounted on Dean suspension (or centre-less) bogies, more of which later. Indeed, the only discernable differences being the wheelbase of the bogies, the panelling on the ends and the number of compartments (usually eight but seven in the case of some C3s). The earliest, the C3, first appeared in 1891 (Lot 555) with 6'4" bogies and clerestory II (i.e.clerestory roof was a one centre arc. All had disappeared by the 1930s. The C10 was introduced in 1894 fitted on 8'6" wheelbase bogies and with both roofs as three centre arcs (clerestory III). Some of this numerous type survived into the 1950's. The C22 followed on after the C10 (the first being Lot 1018 in 1902). With its width increased to 8'6.75" the C22 had different panelling on its ends.

BOGIES

A noteworthy feature of this coach (and our kit) is Dean's suspension bogie as it contributed to a smooth ride and long working life. With these vehicles the load of the coach body was transmitted via scroll-irons bolted onto the solebars down to the bogies instead of using a conventional bolster. The scroll-irons were connected by cross-stays which contained volute springs in spherical cups (springs are not visible because of the protective 'buckets' fitted onto the ends of the cross-stays). Suspension bolts, hanging from brackets on the bogie frames, were fixed to these volute springs. The axleboxes were fitted with leaf springs so the body was actually double insulated from track noise and vibration. This feature, combined with the improved distribution of load,and reduced tendancy to body roll, and a saving of weight (no need for heavy bolsters) more than offset the cost of maintenance. For coaches 50' and over Dean designed a 10' wheelbase bogie with double volute springs fitted on the cross-stays. The second inner pair mounted 'inside' the bogie frame. On all Dean's suspension bogies a centre pin was fitted but the bogie was allowed to slide laterally approximately 6".

PANELLING.

Obviously these coaches had panelled sides and ends and in most cases this was applied to the clerestory deck as well. However in some lots the clerestory sides were unpanelled. As built, the clerestory sides were fitted with glazed panels but problems were encountered with poor sealing that led to rotting of timbers. This factor, and the onset of hostilities resulted in the painting-over of the windows by 1914. Bonnet ventilators (slightly shorter than those above the doors) could be actuated by means of handles near the compartment ceiling. Reduced to working on secondary lines it would be expected that major repairs were carried out probably resulting in removal of areas of mouldings to be replaced with wood or sometimes metal sheeting.

FOOTBOARDS AND STEPS.

When new these coaches were fitted with a continuous upper footboard (probably 9.5" wide) with a (1" - 1.5" high) upstand along the rear edge. The lower footboard was in three parts with only the centre section mounted on two hangers fixed to the solebars. This centre section seems to have been removed prior to 1914 and the lower portion of the hangers cut away. In the 1920's the lower board was removed from the bogies and replaced with a metal step at the coach-end corners of the bogies.To carry this step a second metal support was added to the bogie axleguard alongside the wearing plates. The footboards were 'notched' on the back edge to clear the axleboxes and the scroll-irons.

SAFETY CHAINS.

These were fitted either side of the main couplings to all vehicles as built but were eventually found unnecessary and removed from around the turn of the century.

LIGHTING.

The first vehicles of these types were built with oil lamps but these were replaced by gas lamps fairly early on in their life. The first type of gas lamp to be fitted was described as a "flat flame lamp" and gas was fed to them from cylinders mounted on the chassis via a pipe running up the outside of the end of the carriage and along the roof. Branches from the main feed pipe supplied each individual lamp. The later type of gas lamp fitted from the early years of this century was only subtly different to the above in appearance. The difference basically lay in the mantle now used which provided a much better light than previously. In addition,a second pipe was run along the roof which provided a pilot light for each lamp and this meant that a valve could be introduced to switch off the whole supply. This was fitted to the end of the coach just below the regulator and had a long lever so that the supply could be switched off from the platform. For a much more detailed account of the changes and the various types of lamp you are recommended to the articles by John Lewis appearing in the "British Railway Journal" numbers 13 and 16 (Autumn 1986 and Spring 1987 respectively). Note that the kits cater for the later incandescent gas mantle type lamp although it should not be too difficult to produce the earlier type by a little butchery!

ACKNOWLEDGEMENTS AND SOURCES.

These kits were prepared from copies of the original Great Western Railway works drawings. In addition, we have worked from measurements of preserved vehicles and numerous detail drawings of individual components. Many photographs have also been studied to ensure authenticity. We are extremely grateful to Mr. Patrick Reardon for supplying us with vast quantities of constructional data and for providing us with the enthusiasm to include as much detail as possible! Mr John Lewis has been good enough to provide copious notes on the historical details, and Mr. David Geen has filled in some of the other details. Gentlemen, thank you.

REFERENCES.

Several books and magazine articles have appeared over the years which contain photographs and other information on these coach types. Photographs of trains of them often appear in the many books published about the Great Western Railway and in particular those books and articles about the branch lines. Other sources worth consulting, however, are:

"A Pictorial Record of Great Western Coaches"Part 1 by Jim Russell (OPC).

"Great Western Way" by Jack Slinn (HMRS).

"Great Western Coaches 1890-1951" by Michael Harris.

The following published photographs may be found useful:

"A Pictorial Record of Great Western Coaches"Part 1 by Jim Russell (OPC).

Figure 140 - all third C10 No.3078 pages 85-96 - illustrated notes on heating, lighting, bogies and underframes.
Figure 135 - good shot of gas piping on roof.

For the purposes of this kits the various batches of this coach may be divided into three separate groups.

(1) Lots 724 & 744 had Queenposts at 4' centres PANELLED CLERESTORY.

(2) Lots 773,776,815, 823, 827, 829, 847, 851 had Queenposts at 2' centres with Panelled Clerestory.

(3) Lots 896, 915, 949, 957, 959, 962, 963, 977, 1004 these had 2'centre Queenposts with unpanelled clerestory.

Our kit can be built as a group 2 without any modifcation. If you wish to model the first group it will be necessary to move the queenposts to the 4' centres and to model group 3 it will be necessary to fill in the panelling on the clerestory with a proprietory body filler i.e. plastic padding or milliput.

We have enclosed a simple list of coach numbers with building dates and scrapping dates etc. A full list of coach numbers is tabled under their Lot Nos. in Great Western Coaches by Michael Harris published by David & Charles.

No.	Built	Lot	Gas Flat	Steam F. Heat	Gas Incand.	W.Louvres Removed	Painted Windsor Brown.	Cond.	Notes
2861	7/94	724	Built	1/100	-	-	-	11/48	
2862	7/94	724	"	12/02	-	-	-	10/33	
3027	12/96	823	"	Built	1/16	632	-	9/49	
3028	"	"	"	"	11/17	-	-	11/37	
3029	"	"	"	"	4/13	-	-	12/38	
3030	"	"	"	"	3/13	-	-	4/47	Engineers Dept.
3031	"	"	"	"	1/13	-	1/38	5/45	
3032	"	"	"	"	2/13	-	4/38	4/51	M&T Van No 238
3033	1/97	827	"	"	7/12	-	11/50	8/53	
3034	"	"	"	"	2/13	-	-	10/38	
3035	"	"	"	"	4/12	-	-	8/39	
3036	"	"	"	"	4/13	-	-	12/38	
1209	3/02	927	"	"	6/13	-	12/38	3/58	
1971	10/98	896	"	"	5/15	-	11/37	1/58	
2926	11/95	744	"	2/06	4/11	-	-	N.R.	
3026	12/96	823	"	Built	3/13	-	11/50	9/57	
1941	2/01	962	-	"	-	-	-	-	Preserved.

* Note that no.3027 was dual braked.

CONSTRUCTION - GENERAL NOTES.

The assembly of this model is divided into four stages: building the bogies, assembling the body and fitting interior details, building and detailing the clerestory deck, and finally fitting the underframe and bogies. We recommend that you follow the suggested sequence if only to benefit from the identification of the parts. Many of the details provided are as near to scale as practicable; careful handling of both the components and the finished model will be necessary in order to avoid damage. Indeed, you may wish to omit some of the very fine parts if your model is going to be used on a layout where the models are handled heavily. Where possible we will mention ways to unobtrusively strengthen some of the more vulnerable pieces. Whenever possible however, we recommend that you fit all the parts as much effort has gone into the design of the kit in order to make it look as realistic as possible from any viewing angle.

A variety of materials have been utilised in the manufacture of this kit although it is predominantly moulded in polystyrene. Moulded parts should be cut from their sprues with a SHARP craft knife or scalpel; do not attempt to break them off the sprues as the risk of damage is high especially with some of the smaller items. Clean off any ejector pips and/or flash using small needle files - do not use a knife as there is a high risk of removing too great a quantity at a time.

Take great care with the etched parts as some are very delicate indeed as you will soon find out. They should only be removed from the frets when required as the identification numbers are usually etched into the surrounding waste metal. To remove the parts use a SHARP craft knife or a piercing saw; do not try to break them out or use cutters as the risk of damage is very high. Any remaining pips and ties should be removed using small needle files, and the metal cleaned if required using a small glass fibre burnishing brush. Note that several spare and alternative parts are provided on the etching so do not worry if you have a few parts left over!

Castings should be removed from their sprues using a piercing or razor saw.Do not use cutters as they will probably damage the castings. Resultant pips, etc.should be removed using small needle files and/or emery paper.

To construct the model upon, it is well worthwhile investing in a small piece of plate glass - this will help to ensure that all the parts go together squarely and accurately. Use MEKPAK fluid cement to bond plastic parts together, and use an epoxy type (e.g. fast setting Araldite) or one of the slower curing cyanoacyrlic adhesives (e.g. Loctite Multibond) for bonding metal to plastic. Solder is recommended for assembling the etched items although it is conceivable that certain types of glue could be used. Solder, however is far superior!

Before starting the construction of the model please read all through the assembly instructions and study as many photographs of the prototype as you can lay your hands on so as to ensure you get the details correct.

DEAN 8'6" SUSPENSION BOGIE.

Pre-Construction Notes.

We hope you will enjoy building your 7mm scale Dean bogies. The following points are worth remembering. We have endeavoured to produce all parts as near to scale size as possible. Individual pieces may be fragile but the completed unit becomes quite rigid. This perhaps reflects on the sound engineering in Dean's design. Folds should be made only once and then re-enforced with solder. Some details are also 'pinned' with 0.5mm wire. After extolling the virtues of 'centre-less' bogies in the historical notes you will see that we have mounted the bogies on a central bolt and provided cosmetic scroll-irons. This is necessary due to the small radius curves used on many layouts and the practical limitation of scaling down clearances. However, the challenge is there for the ambitious modeller to produce a working suspension bogie.

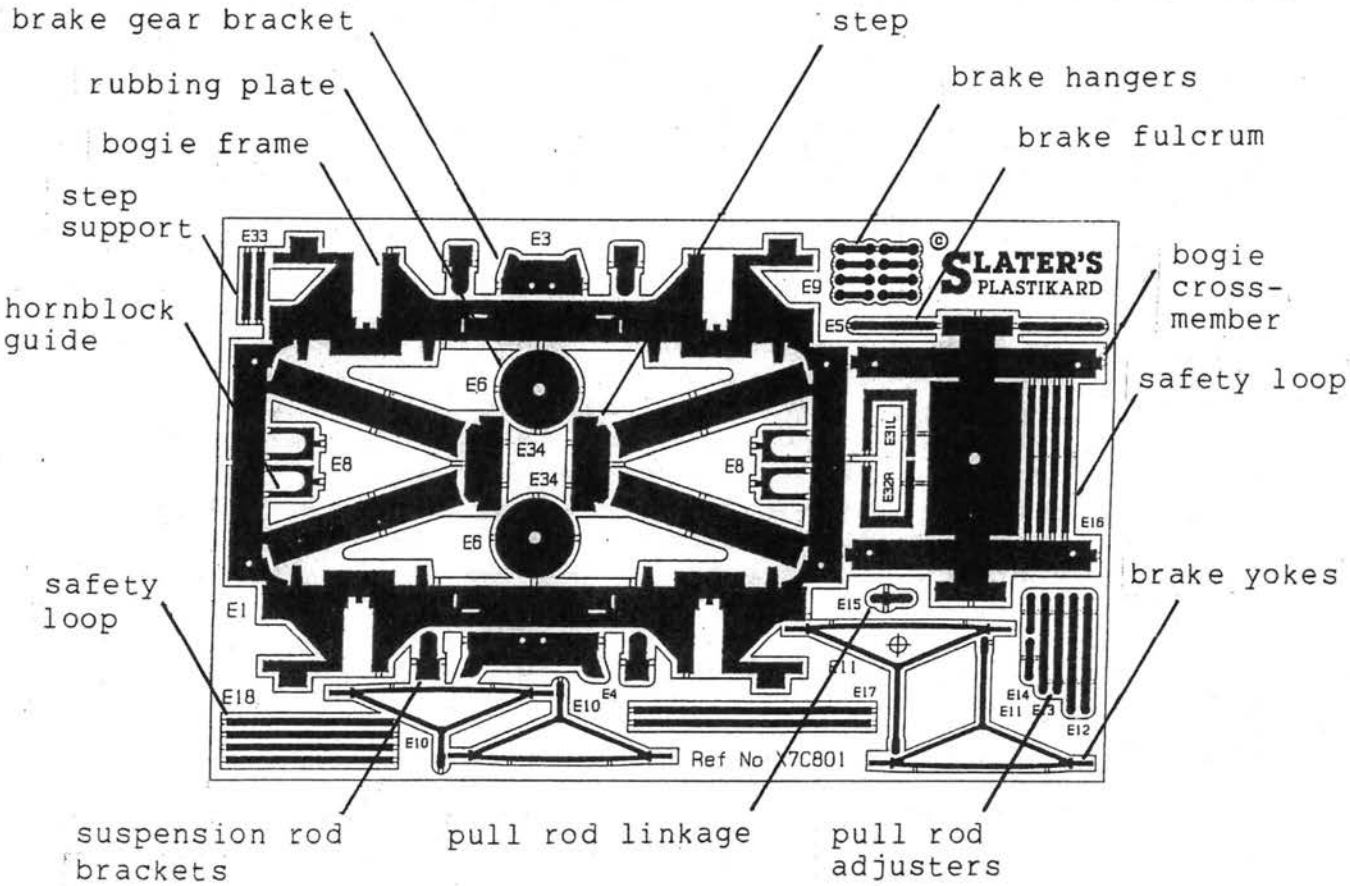

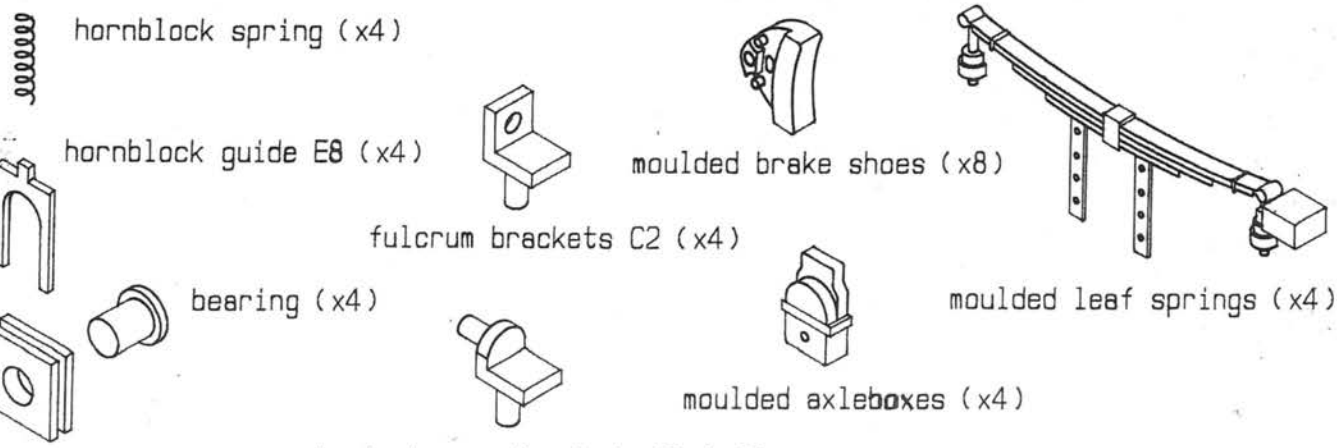

Parts are not to scale.
Quantities are given for 1 bogie.

Before removing any parts from the fret study the diagram on the left. You will see that the pieces for the bogie are described and given a part number. Remove the etched parts only when prompted to do so. Some small details will be released before required and should be safefully stored.It is a good idea to drill out the holes in the parts whilst they are still attached to the frets.

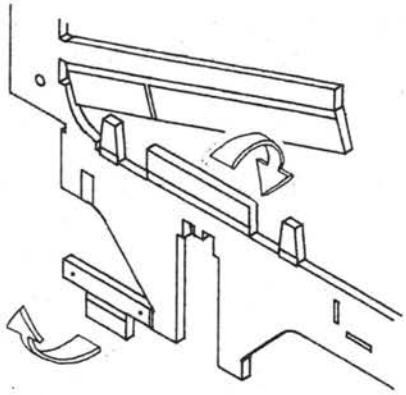

1 ☐ Fold the tabs above the axleguards back through 180 degrees so that they are on the inside face of the bogie frame. The 1/2 etch fold should be on the outside and can be filed off once the tab has been soldered in place. Refer to detail 1. Remove the main bogie frame E1 from the fret and form the rivets in the stays attached to the lower corner of axleguards. Also fold the tabs on the stays through 180 degrees and solder in place.

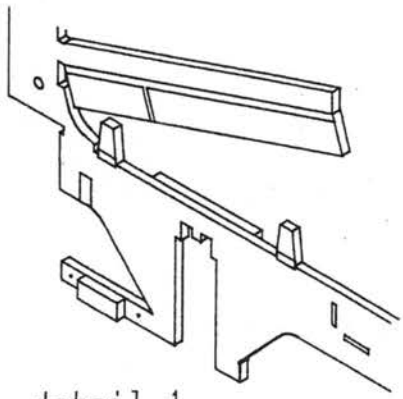

detail 1

2 ☐ The four oblique underframe members in E1 are infact (8"x 3.5") L sections so fold them as shown in detail 1b with the fold on the inside. Now fold down the bogie sides,ends and spring stops;the bogie should look like pictorial 1.

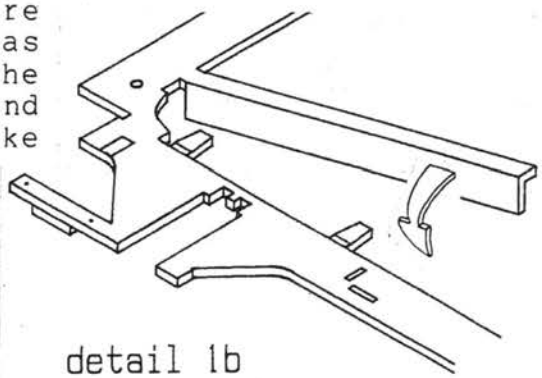

detail 1b

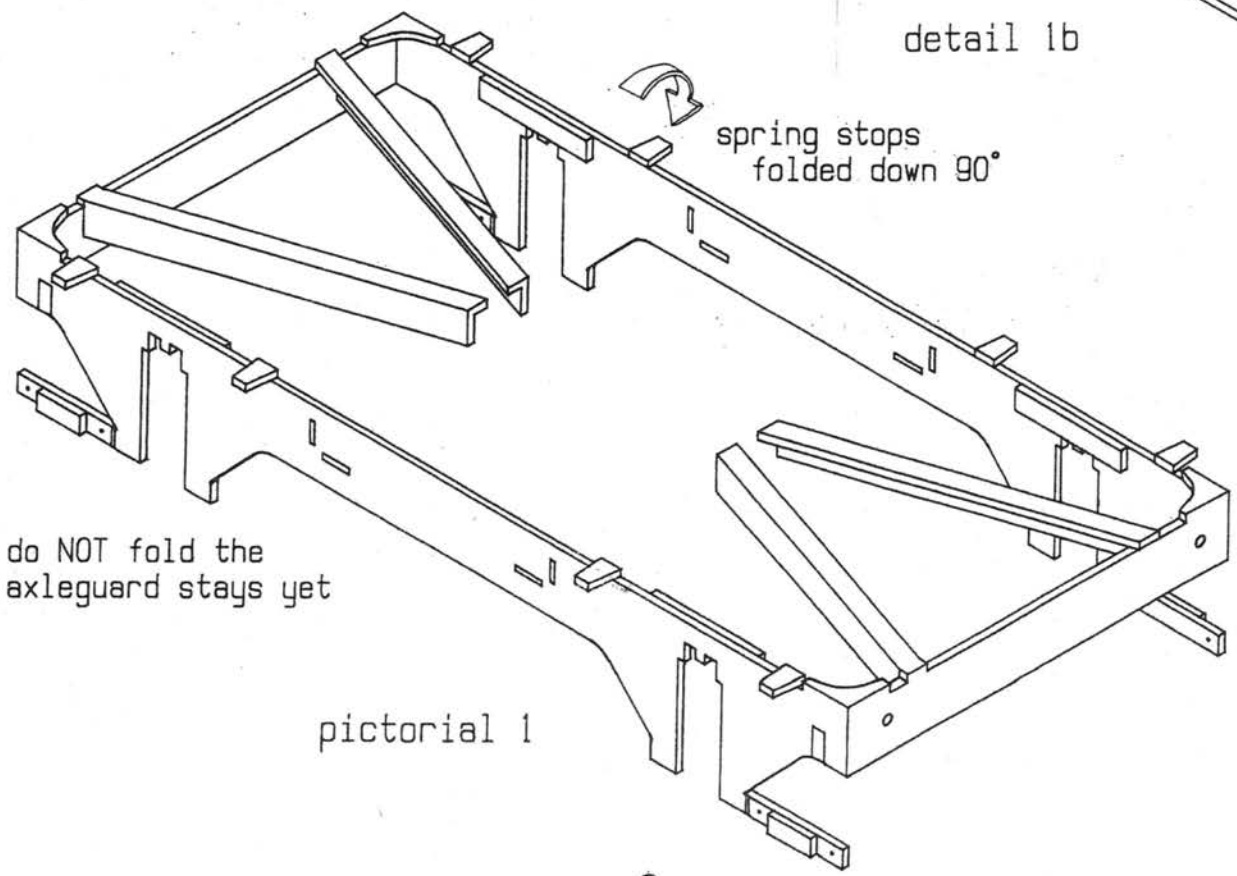

pictorial 1

3□ Remove Part E2 and fold in stages, as shown in detail 2, to form the central cross-members. Cast brake hanger brackets C1 should be soldered into the holes in E1 & E2 and their pins filed flush. The correct orientation of C1 is illustrated in pictorial 2. Fit E2 into slots in bogie frames and solder all folds and joints without disturbing the bracket castings.

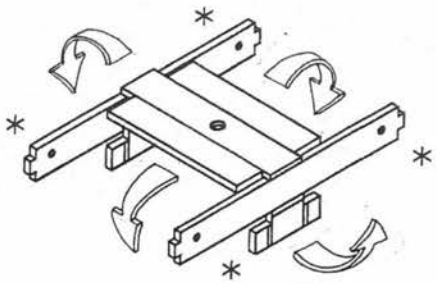

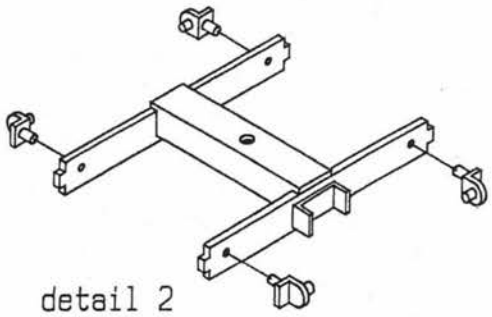

detail 2

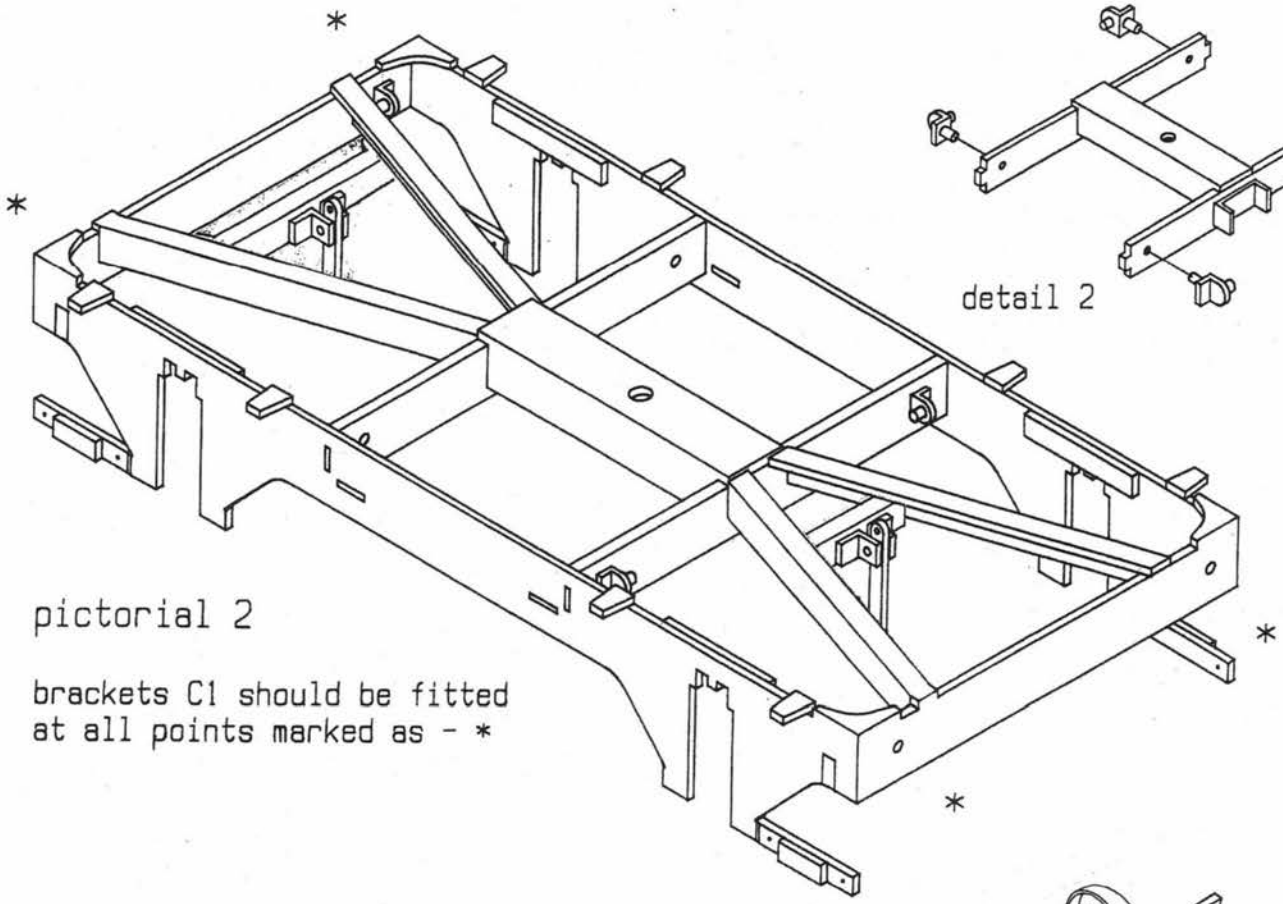

pictorial 2

brackets C1 should be fitted at all points marked as - *

4□ Part E3 forms a short cross member between the oblique cross-members and carries a bracket for the brake 'fulcrum'. Fold E3 (1/2 etch on inside) and add both halves of the bracket (C2 x 2). You should leave 0.020" (thickness of the etched pieces) between the bracket pieces and clear the holes with a 0.5mm drill. Don't fit E3 into the bogie yet.

Now repeat the last step with part E4 adding more bracket halves.

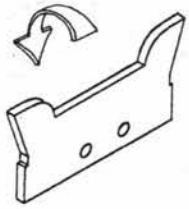

detail 3

5□ Clear the holes in brake fulcrums E5 with a 0.5mm drill and remove them from the fret. Pin fulcrums into the brackets in E3 and E4 using 0.5mm wire. Be sure to use the middle hole of the three holes and allow E5 to rotate freely. Now fit E3 and E4 into the bogie referring back to pictorial 2.

Note that E4 (the longer of the two) indicates the end of the bogie nearest to the coach end.

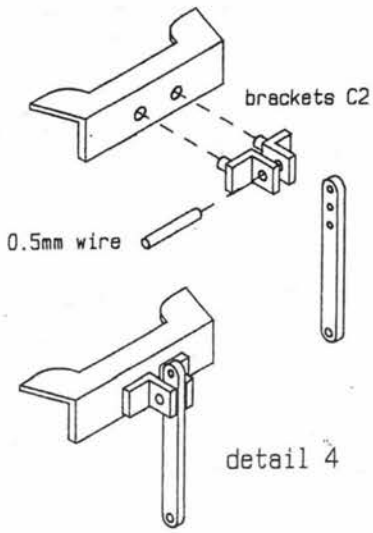

detail 4

6 ☐ Solder one of the rubbing plates E6 onto the top of the bogie frame aligning the pivot holes. Place the bogie upside down on your piece of glass and check that the frame is parallel to the glass. This should ensure that the coach body will be vertical when it sits on the bogies. Now is a good time to check that the bogie is 'square', clean and that the tabs on E2 are filed flush with the outside.

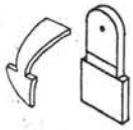

7 ☐ Remove the suspension rod brackets E7 from the fret, fold and fit them into the bogie as shown in detail 5.

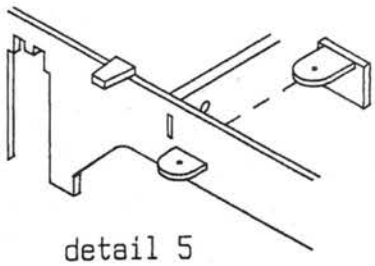

detail 5

Before the brake gear can be fitted the wheels should be in position. Follow the steps, take your time and aim for working clearances with a minimum of play.

8 ☐ Make sure that E8 will slide up and down. You will have to smooth the sliding edges of E8 and the axleguard.

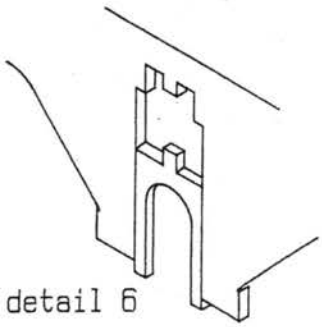

detail 6

9 ☐ Push the hornblock onto the guide as far as it will go and make sure it is perpendicular to the bogie top edge . Very carefully 'tack' (with solder or cyano) the lower extensions of E8 to the hornblock making sure that the unit will slide up and down. That was the tricky bit!

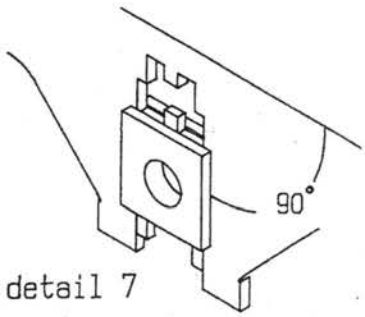

detail 7

10 ☐ Remove the hornblocks from the bogie and slide a brass bearing into each unit but don't secure them yet. Place a hornblock/bearing onto the ends of the axle and fit the wheelset into the slot in the bogie side. Don't fit the spring yet because the wheels will be removed again, but short strips of masking tape across the bottoms of the axleguards will retain the wheels for now.

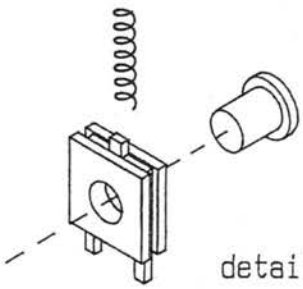

detail 8

11 ☐ Remove the brake hangers (E9) from the fret and open the hole at one end, if necessary, to allow them to fit onto the hanger brackets (C1). The other end of the link should fit over the upper pin on the moulded brake shoe. Detail 9 shows the correct orientation of the parts. Note that the brake shoe is fitted with the 'plain' side facing inwards.

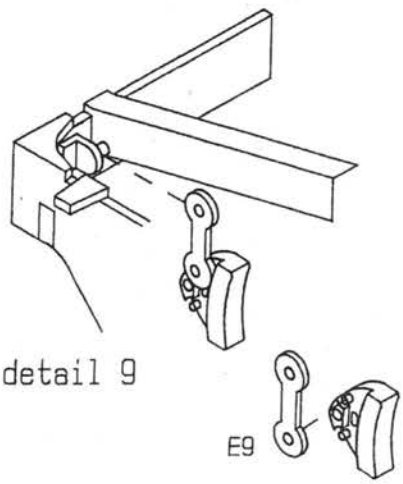

detail 9

12□ Remove the long brake yokes (E10) from the fret and twist the end through 90 degres as shown in detail 10. Keep the twist short and close to the end with the holes. Fit the yokes with their pins in the brake shoes and the other end pinned (with 0.5mm wire) to the top hole in the fulcrum.

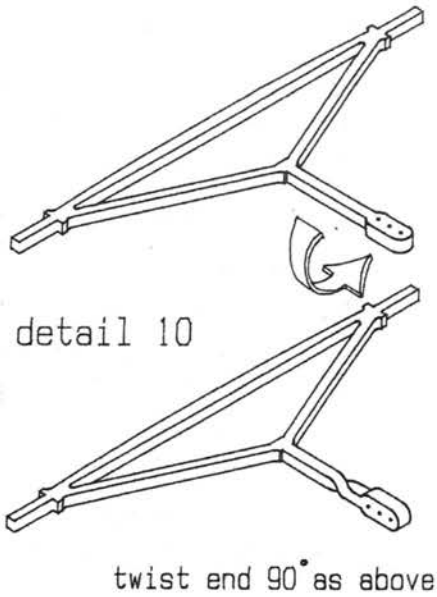

13□ Repeat the above with the short yokes (E11) but obviously pin them to the fulcrum using the holes just below the bracket C1. With the wheels in place slide packing pieces between the brake shoes and the tyres. The brake shoes should ideally be backed off approximately 0.015" to allow for movement of wheels. The brake gear components should now be locked in place using solder, or glue where appropriate. The wheels can be removed again.

14□ We are now going to add the safety loops (E16, E17 and E18) fitted to catch any brake gear components that became detached. If you wish to form the rivets in these loops do so before removing them and be careful not to distort the parts. Refer to detail 11 for the folding

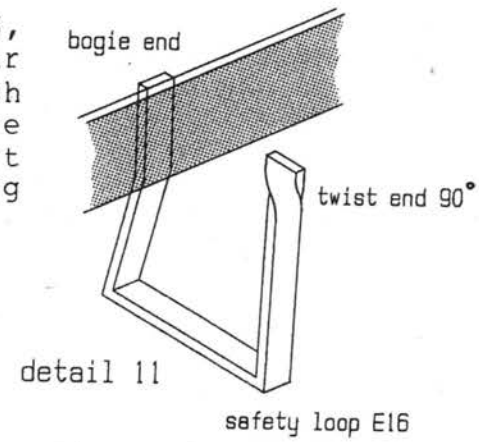

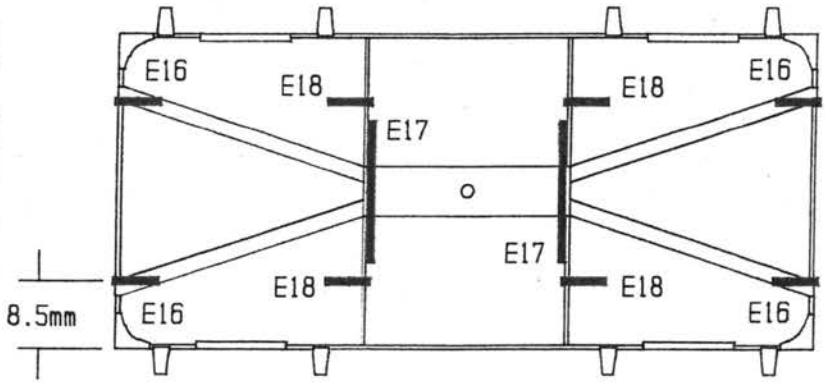

Top view of bogie showing positions for safety loops.

of the end loops. One end has to be twisted to fit inside the oblique frame-member. When fixing them to the bogie end their centre line should be 8.5mm in from the corner. Note that rather than hanging vertically they should be raked back approximately 1mm.

15□ Loop E17 fits inboard of the main cross-members with it's ends 19mm apart. Again their ends are twisted through 90 degrees and the bottom of the loop should be 15.75mm below the top of the bogie.

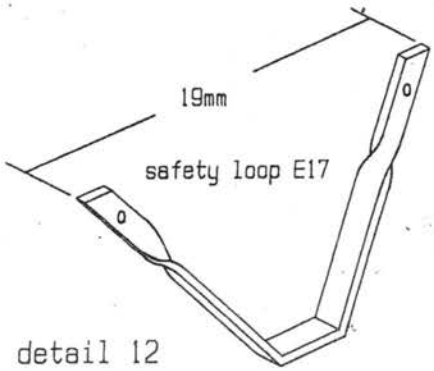

16 ☐ Finally fit the loops E18 onto the cross-members. Refer to detail 13 for the correct folding of these parts. E18 is the trickiest loop to form and fit but do persevere! They should line up with the previously fitted end loops.

17 ☐ If you are modelling the bogie after circa. 1920 with no lower step board you will need to fit step supports E31L and E32R. Fold to shape as in detail 14 and solder the bends. Solder to the bogie frame (up to 1/2 etched lines) with the longer leg nearest to the bogie end.

18 ☐ Form the metal steps E34 and solder onto the step supports fitted in assembly note 17.

19 ☐ If you wish to fit stepboards single supports are needed at the ends of the bogie sides. Cut the supports (detail 15) and fix the longer leg onto the bogie. Part E33 forms the other support. The stepboards will be fitted later.

20 ☐ Before finally fitting the wheels it is an appropriate time to paint the inside of the bogie. Additional pieces will be added to the outside of the frames. Refit the wheels as before but now include the small springs. They locate between the pegs on the hornblocks and the bogie etch. Fold the stays at the bottom of the axleguard over and solder in place. You could, if you wish, remove the stay completely and solder it in place with no fold. Removal of the wheels later would be easier if you did this.

21 ☐ Remove the moulded leaf springs from the sprue and try them for size on the bogie. You may need to clear any 'flash' from the inside edge of the wearing plates to allow free movement on the hornblocks. Don't fix them yet!

22 ☐ Cut the supplied pins to 5.5mm length (under the head) and clear the holes in the brackets (E7) so that the pins will fit. Now fit the moulded springs trapping a pin (suspension rod) in the bracket.You will need to slightly hollow the block near the spring hanger to allow the pin to move freely. Also hollow out the back ofthe leaf spring where the coil spring fits.

23 ☐ The wheel bearings, which have not been fixed yet, can be adjusted in and out to 'centre' the wheels and allow rotation without sideplay. When you are satisfied that the bogie will roll freely the moulded axleboxes can be added.

The bogie is now complete. The stepboards (if required) and pull rods are added when it is mounted under the coach underframe.

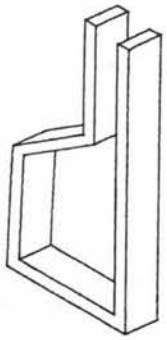

safety loop E18

detail 13

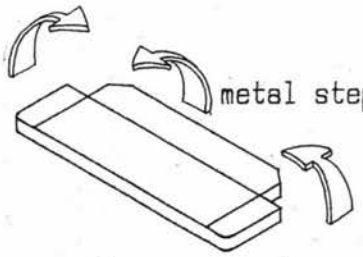

metal step E34

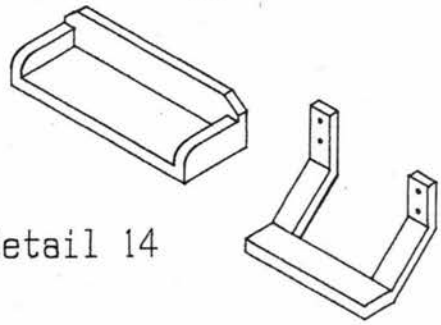

detail 14

step support
E31L & E32R

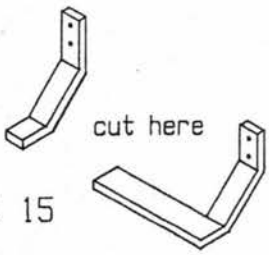

cut here

detail 15

this section will
not be required

detail 16

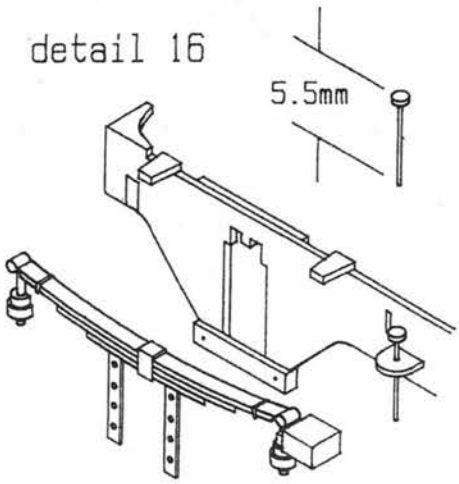

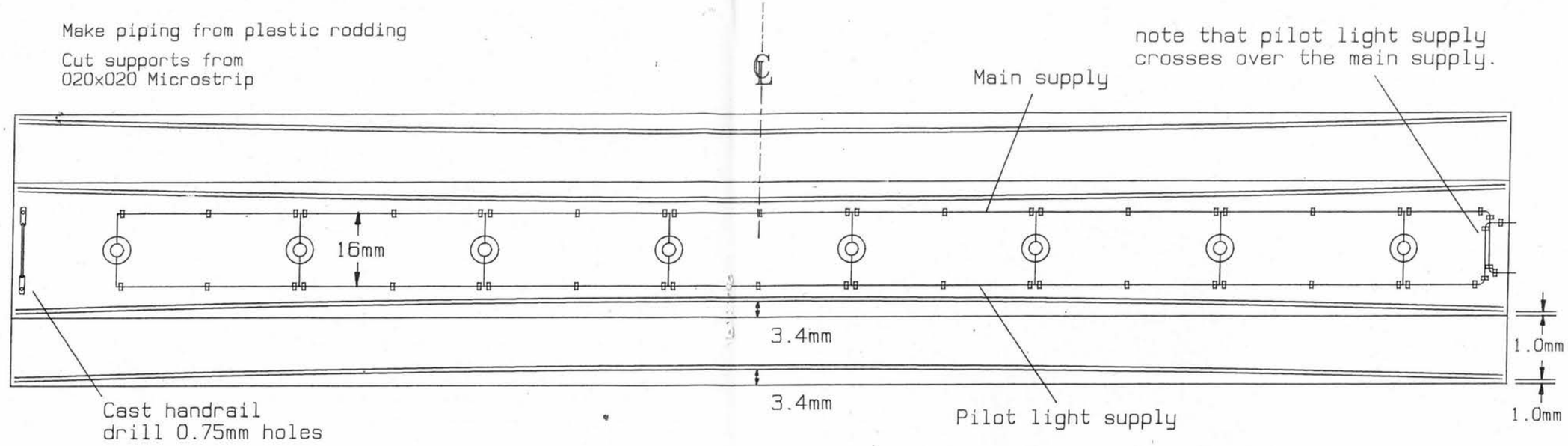

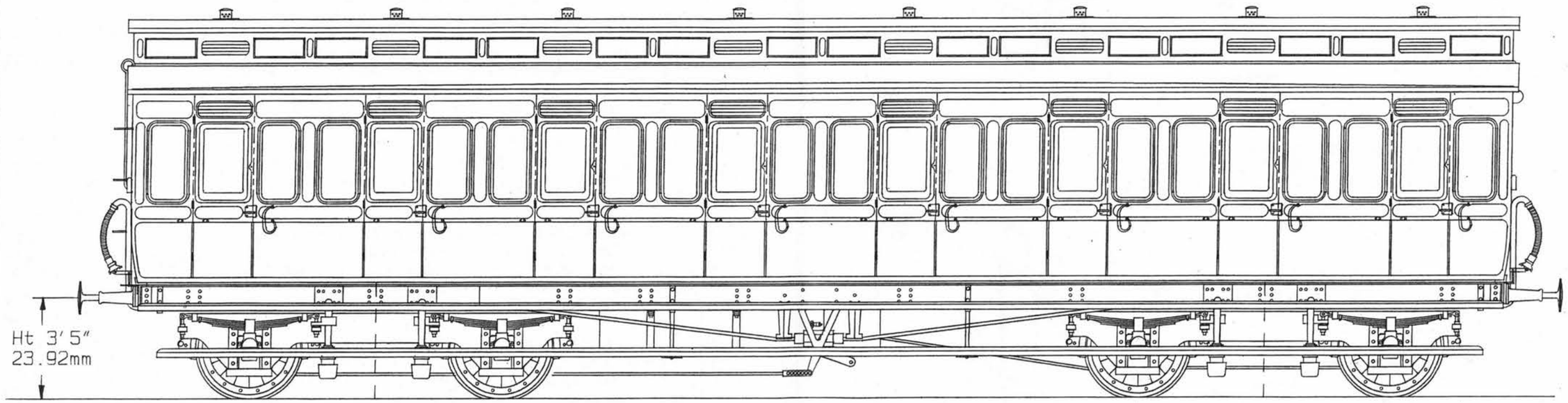

Diagram C10

Non corridor all third

Length over mouldings 46" 6.75"

Width over mouldings 8" 0.75"

Coach ends 5 panel turnunder

Bogie centre to centre 30" 0"

Bogie wheelbase 8" 6"

Bogie type Dean Suspension Bogie

Wheel diemeter 3" 7" on tread

Gas lighting (supplied from 2 cylinders 7" x 18"dia.)

Built 1894 - 1902

ASSEMBLING THE COACH BODY.

By now you will have noticed that some of the coach components are moulded in two halves and will need to be joined. This should not present any problems if you first carefully remove any flash from the parts, work on a firm flat surface and check the joined parts with a metal straight edge.

Ventilator bonnets fit into panels above the doors.

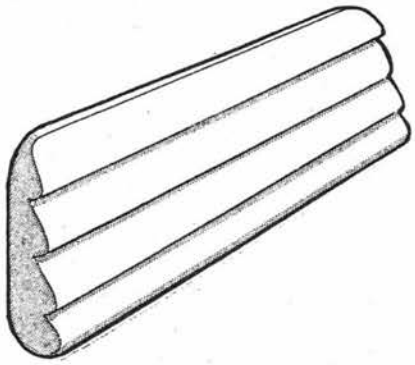

Note that the bottom edge is thicker than the top.

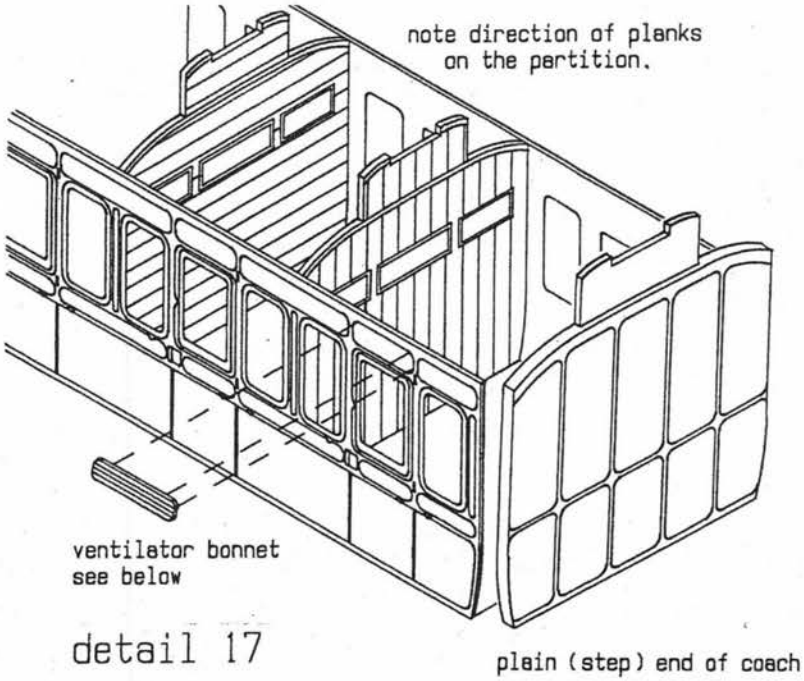

detail 17

24 ☐ Take the side mouldings and clear off any moulding pips or flash with fine needle files. Open out the holes for the door and commode handles with a 0.5mm drill (No.76/0.020") but do not fit any of the castings at this stage.

25 ☐ Fit moulded ventilator bonnets centrally into the panels above each door as in detail 17. There are two types of bonnets and you must use the longer (light coloured) mouldings on the coach sides. Stick the sides together with the beading aligned and leave to dry (at least 6 hours).Study the end mouldings and remove any flash. There is nothing to do to the plain (step) end at this stage, but drill out the centre of the two raised vacuum release gear "lugs" with a 0.5mm drill to take a piece of wire refer to detail 18.

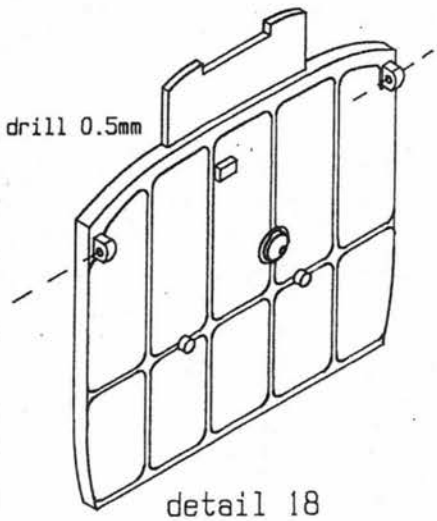

detail 18

26 ☐ Asssemble one end to a side on your piece of plate glass and ensure that the bottom of each is coincident. You may find it necessary to remove a small amount of plastic flash from the inside edge of each end to ensure that the panelling on the ends is at the same level as the extreme ends of each side - the ends of the side form the outside verticals of the panelling on each end. Run MEKPAK along the join to weld the two together. Add the other end and then the

opposite side to form a box without base or lid. Check that all is square and leave to set. Join the two floor mouldings and check that the edges are straight. The two holes should be 210mm centre to centre (30 ft in 7mm/ft). The raised ribs that run the length of the floor with gaps will locate the solebars. The raised lateral ribs actually simulate packing pieces that separate the coach body from the underframe. You may like to scribe planking to represent the floor boards which would be 4mm apart and run at 45 degrees to the side of the coach. The prototype floor was made in two layers of planking running at right angles to each other. These plank lines should be very shallow so as not to distort the floor. Cement the floor in place and check it with detail 19.

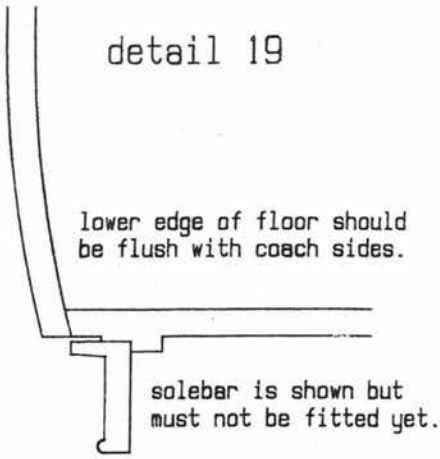

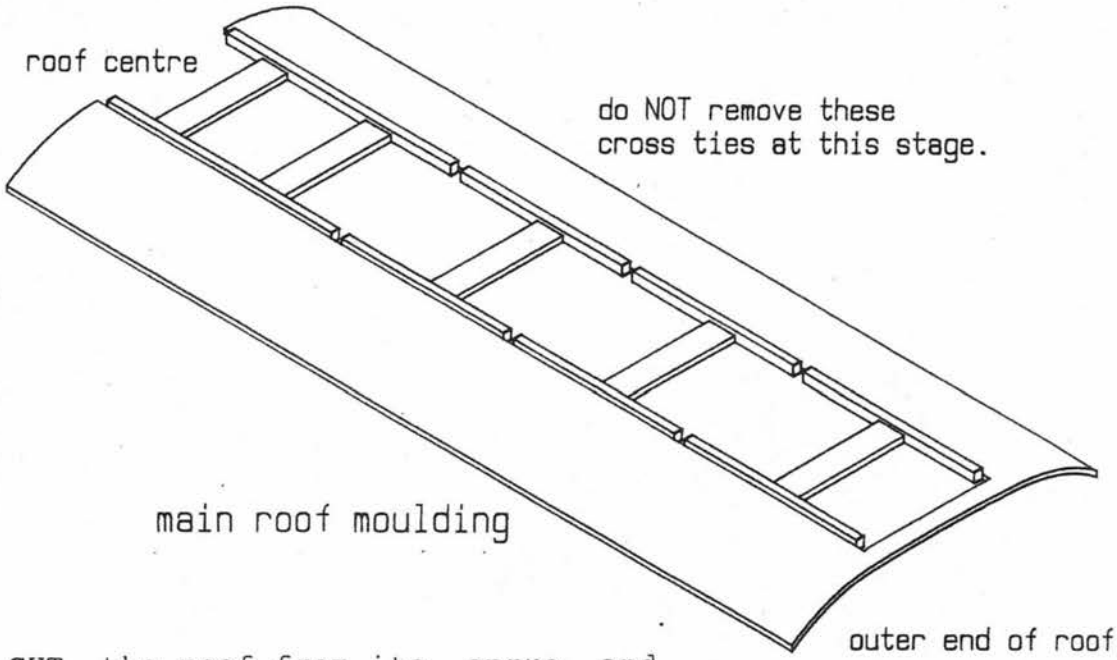

27 ☐ Carefully CUT the roof from its sprue and remove the feeds. Later, the ties that connect the two sides will be removed but leave them uncut for the moment. Join the two halves, check that the edges are straight and allow it to dry. When the roof has set the edges can be shaped with a file referring to detail 20 for the correct profile. The clerestory roof will eventually need shaping too so you will come back to detail 20 again. The partitions can now be added. These were also made up of two layers of planks on the prototype which is why the planks should run vertically on one side and horizontally on the other. Fit the partitions checking that they do not appear above the level of the ends. In each compartment (except for one end) the planking on the partitions should run in the same direction. Try fitting the roof down over the partitions; they should be positioned to allow them to slide into the notches in the roof moulding.

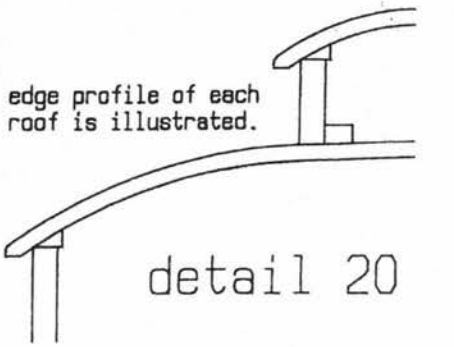

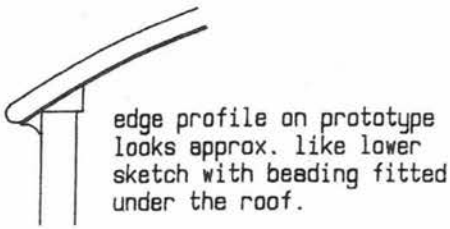

28 ☐ The moulded seats can be assembled and fixed into the compartments. Note that to produce 3rd class seating the "seat" portion must be cut back along the notch on the underside. As supplied they make up into deeper 1st class seats.

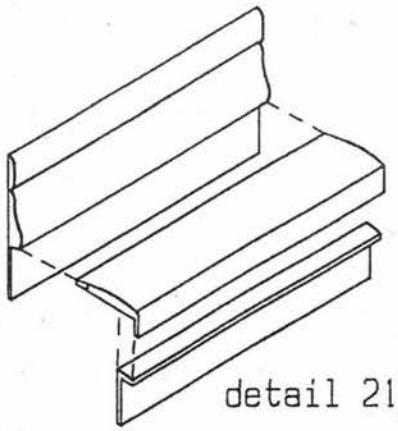

remember to cut seats to produce 3rd class seating.

29 ☐ If you wish to add the etched luggage racks they should be soldered to their baseplates and glued to the partitions in between each picture frame. A thin piece of wire should then be soldered across the tops but no netting is supplied. Two patterns of rack are supplied, the longer ones are for first class compartments, the shorter for second and third class.

30 ☐ It is a good idea to paint the inside of the vehicle at this stage as it will become a little inaccessible later. Any extra detailing that you wish to incorporate should also be added at this stage. Some information on interior finishing can be found at the bottom of this page.

detail 22

31 ☐ Now cut to length the 12mm wide strips of Plastikard and fit them into the channel formed along the top of the partitions. The strips should be joined at the centre partition and not extend beyond the coach ends.

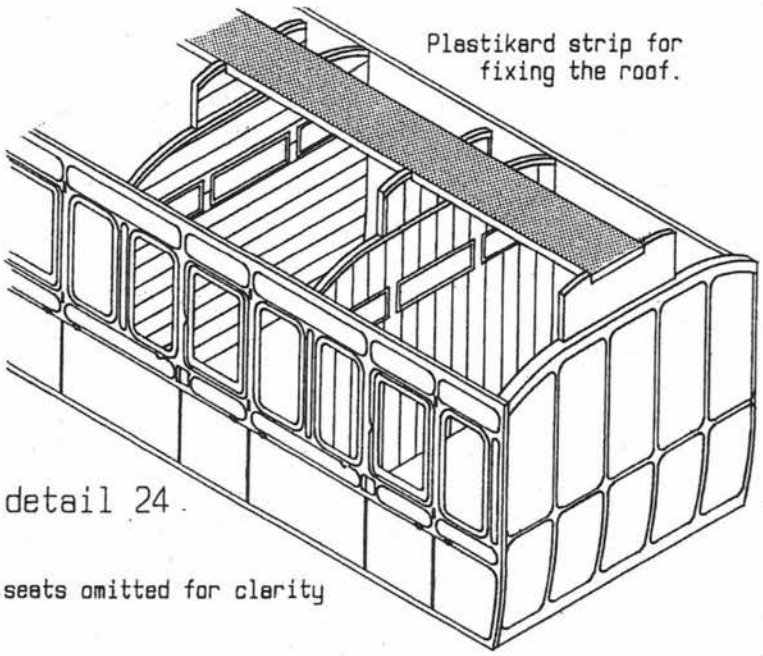

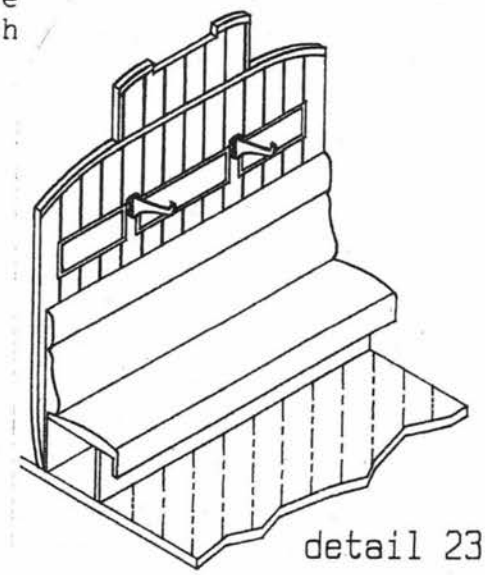

typical compartment with scribed planking on floor, seats and luggage racks.

"Great Western Way" contains a good summary of the interior finishing for the various periods and we suggest that you refer to this for detailed information. Basically, however, the interior woodwork was left varnished (oak, mahogany, and walnut were used) and up to about 1911 the first class seats were in dark green leather, second class in brown moquette, and third class in red rep. After this time green cloth was used in first class compartments and dark blue rep in third class. Later on brown or chocolate cloth was used in first class and red material in third class compartments. These, however, were the colours adopted for new construction and it would appear somewhat unlikely that all the upholstery in older vehicles would have been changed.

32 ☐ Remove the clerestory sides from the underframe sprue and fit the remaining ventilator bonnets. Note that the "windows" need glazing with strips of the supplied Plastiglaz. Remember that after circa. 1914 these windows were painted over so you could use an opaque plastikard 0.010" or less thick. The sides should now be joined together and allowed to set.

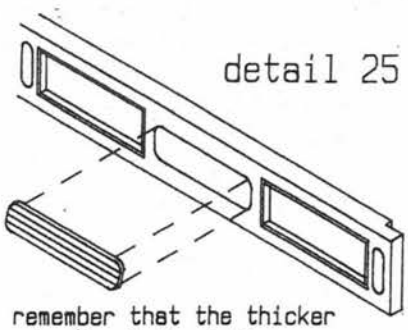

remember that the thicker edge is at the bottom.

33 ☐ Glue the clerestory sides and ends onto the main roof fitting the sides up to the locating rib. The amount of roof showing at each end should be the same and the ends of the clerestory sides form the vertical beading on the end mouldings. Leave the clerestory deck to dry while we prepare the details for the roof.

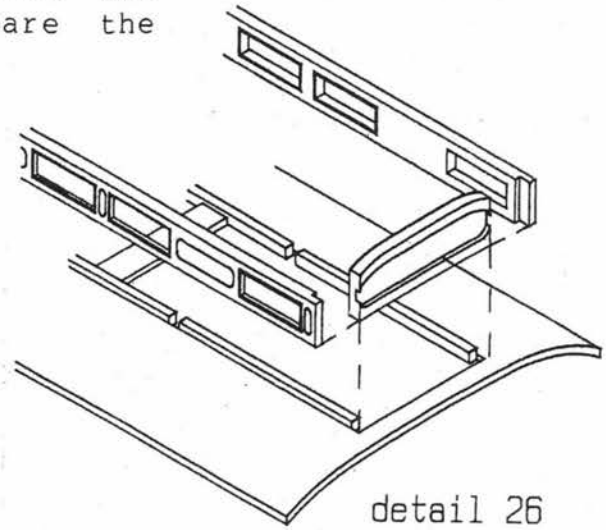

34 ☐ Positions are marked on the underside of the clerestory roof for the cast lamp tops and the handle. Drill out the lamp positions with a 2.5mm drill (No.40/0.098") to clear the threaded spigot on the base of each cast lamp. Clear two holes at ONE END ONLY for the cast handle. When the roof is fitted this will be at the step end of the coach. Now join the clerestory roof pieces, and when set, refer back to detail 20 to profile the edges. Special attention should be given to the joins in the two roofs as any imperfections here would be obvious to the casual observer. Carefully file the joint area and finish off with "wet and dry" paper. Hold the paper on a small "sanding block" to avoid creating hollows and work down from "600" grade to "1200" (if you can find a supplier). You may wish to cover the roof with 'tissue' canvas and we refer you to a comprehensive article by Patrick Reardon Model Railway Journal No.24 1988 pages 199-204 and Model Railway Journal No.28 1989 pages 17,18,29-36. The clerestory roof can be fixed to the clerestory sides and the cross-ties in the main roof should be carefully cut away.

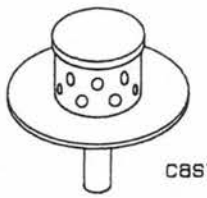

detail 27

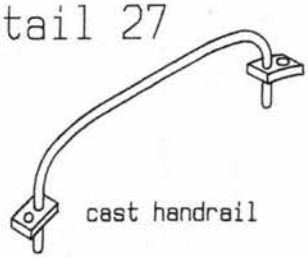

handrail fitted at one end of roof.

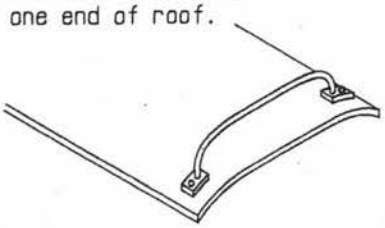

detail 28

35 ☐ Lengths of plastic rodding should be fitted around the base of the clerestory sides and ends to form beading. This is in fact a "quadrant" moulding and the supplied rod could be scrapped to create this profile. In practise this is unnecessary because the round rod looks quite effective.

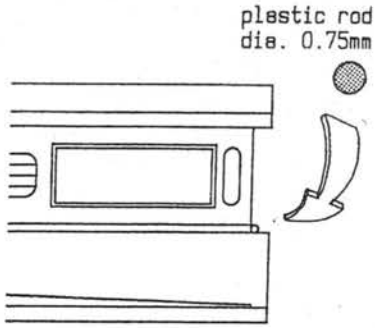

detail 29

36 ☐ Now rest the roof on top of the body and mark the lamp top positions through the roof onto the bracing strip inside the model. This strip should be drilled 1.78mm (No.50/0.070") and any burns removed. The roof is arranged so that the lamp tops can be screwed into this strip thus holding the roof in place and making it removable. If you wish, the roof can be glued in place after glazing, etc. but the choice is yours.

37 ☐ The rainstrips are formed from the supplied microstrip and should be fitted now. Carefully mark the positions of the ends and middle of each strip following the diagram in the centre of these instructions. Do take care to get a nice even curve along the roof as it is so obvious on the finished model. Still on the roof, the cast handrail can be fitted on the clerestory roof (remember this should be at the step end of the coach).

detail 30

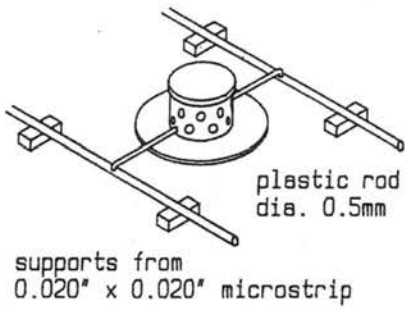

38 ☐ You may wish to fit the piping for the lamptops; information is given on pages 13/14 and detail 30. If you are relying on the screwing down of the lamp tops to hold the roof in place you won't be able to fit all the gas feeds into the lamptops. Obviously you will also need to "break" the pipes before they run down the end of the coach. Do try and fit some piping to the roof because it does add greatly to the appearance of the final model.

39 ☐ The destination board brackets, (31 on X7C0403) can now be made up. You will find them on the small fret with other details for the coach end. The brackets should be bent over to a "U" shape so as to form a thin recess for the boards themselves (E30). It is thought that these were fitted onto the eaves panels near the end of the coach sides.

ASSEMBLING THE UNDERFRAME.

40 ☐ Take the two end sections of the coach underframe and remove any moulding pips or flash. You will also need the pair of 8BA nuts and bolts. The bolt drops into the hole from the top and the nut is "captive" in the round recess. The bogies will pivot on these bolts and be retained by the remaining nuts.

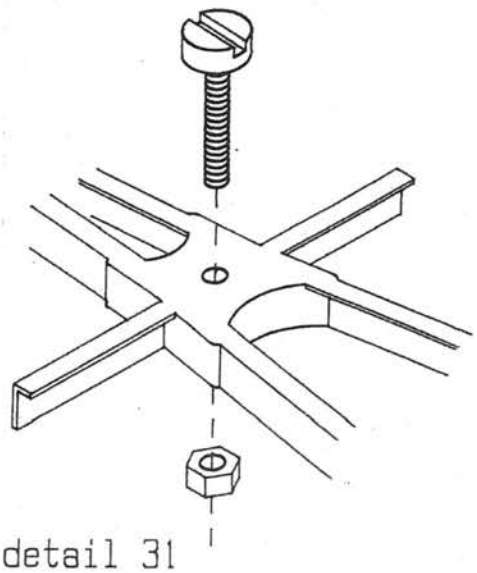
detail 31

41□ You should also fix the racking plates E19 & E20 onto the underside of the body at each end as in detail 32. Note that the centre "end stop" should be folded up so that it touches the coach end. The racking plate with steps (E19) should be fitted at the plain (step) end of the coach!

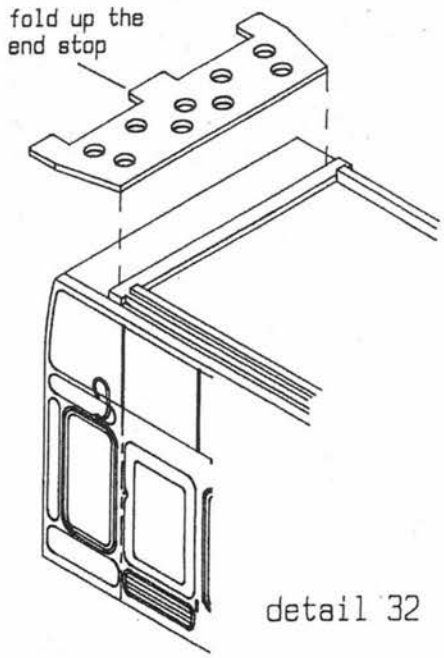

detail 32

42□ Cut the solebars from their sprues and clear the step hanger and scroll-iron holes with a 0.75mm drill (No.69/0. 020"). You will also need the centre section of the underframe. Support the coach body with the step end on the left and position the underframe mouldings onto the underside of the body. The end mouldings locate in the holes at the bogie centres and the centre section fits (after trimming if necessary) between them with the post for the vacuum cylinder towards you. Now add the solebar sections with the "bulb"moulding on the lower edge as in detail 33 and the underframe crossmembers in between their locating lugs.

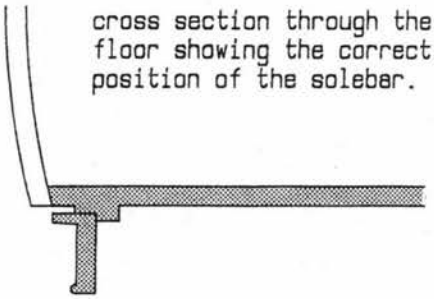

detail 33

43□ The headstocks can be fitted with their longer flanges up against the racking plates. The front faces of the solebars should come level with the lower edge of the coach ends with the etched racking plate creating a 0.010" gap. The turned buffer guides fit into the holes in the headstock and the buffer rams and springs are retained with the small etched clips. We are advised that the buffers are easier to fit prior to glueing the headstock in place and there is no reason why this should not be done.

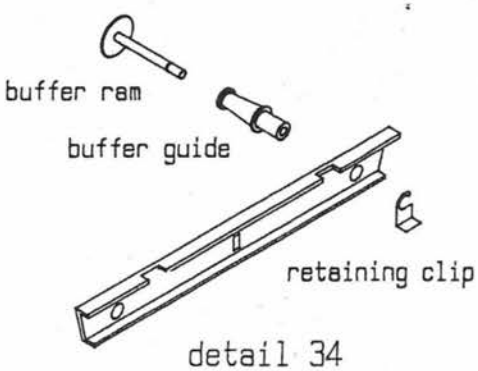

detail 34

44□ Assemble the vacuum cylinder and drill the two lugs on the bottom plate 0.5mm (No.76/0.020"). Thread a length of 0.75mm plastic rod into the vertical holes/lugs and cement in place trimming off flush at the top. Thread a length of 0.5mm wire through the two holes just drilled but do not glue into place. Locate the vacuum cylinder onto the moulded peg on the underframe and ensure it is vertical.

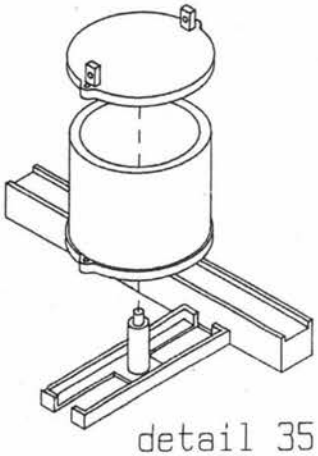
detail 35

45□ Glue together the halves of the gas cylinders and fit the ends. Each cylinder has a cast valve fitted in one end and this should point towards the vacuum cylinder. The cylinder supports fit onto the underframe crossmembers such that the centre to centre spacing of the cylinders is 25mm.

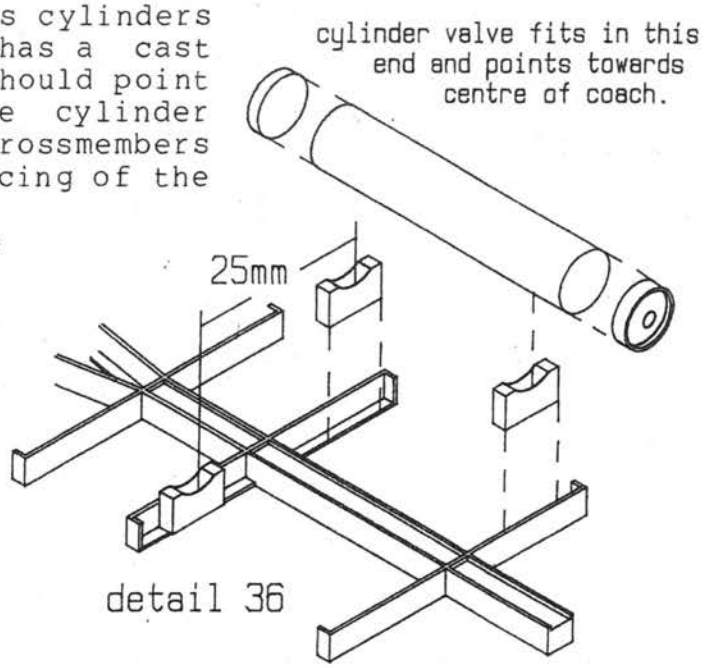

detail 36

46□ Remove the vee hangers (E21 & E22) from the fret and fit one (E21) over the lug on the central underframe members. The second is fitted onto the rear face of the solebar on the same side as the vacuum cylinder. You could also carefully remove the moulded rivet heads from the other solebar at this point. Thread a length of 1mm wire through the two vee hangers also threading on the operating levers (E24) and arm (E24A). Note that the operating arm should be towards the centre of the chassis as in detail 37. Connect the two operating levers to the wire protruding either side of the operating cylinder and secure with a very quick touch of the soldering iron or a small drop of glue. Leave the operating arm free at this stage.

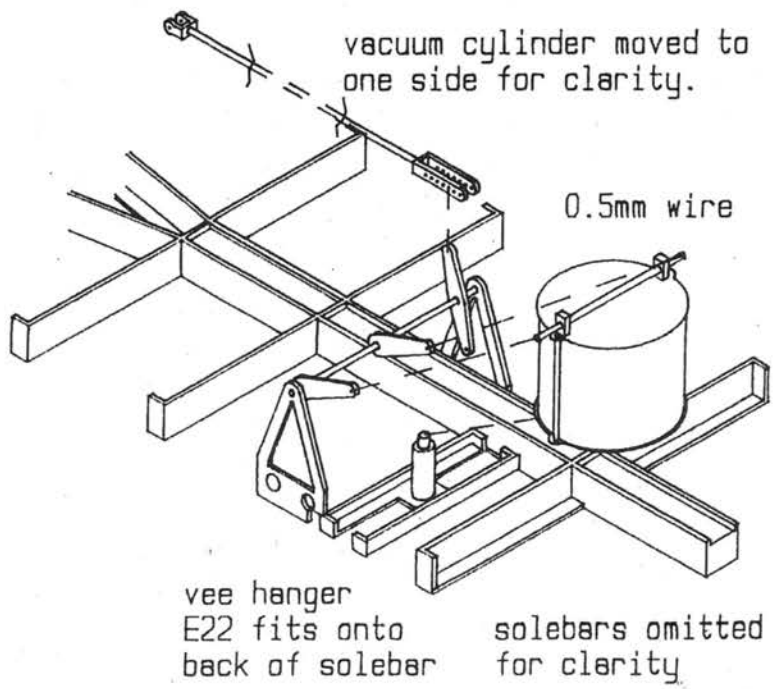

detail 37

47□ Secure the cast queen posts to the back of the solebar at 14mm centre to centre. The truss rods can be formed out of the 0.75mm wire and fitted as detail 38; not forgetting to slide a cast tensioner onto the wire first!

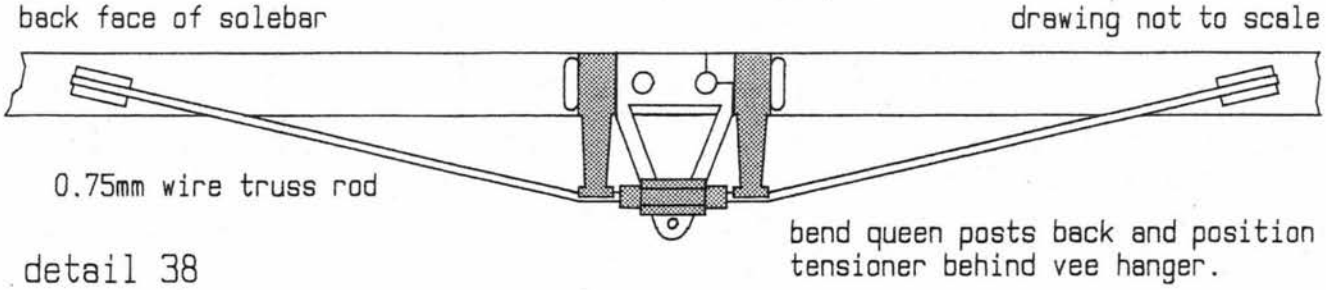

detail 38

48□ The ends should now be detailed and the drawing below explains where the various pieces fit. The etched steps (E25 & E26) are rather vulnerable and would benefit from having a short length of wire soldered to their rear face to form a fixing peg . Also take care with the lamp irons (No.34 on X7C403) as they are rather delicate. The pipe from the vacuum release box should be formed from fuse wire and connected to the top of the vacuum pipe to represent the vacuum release gear.

Detailing the coach ends

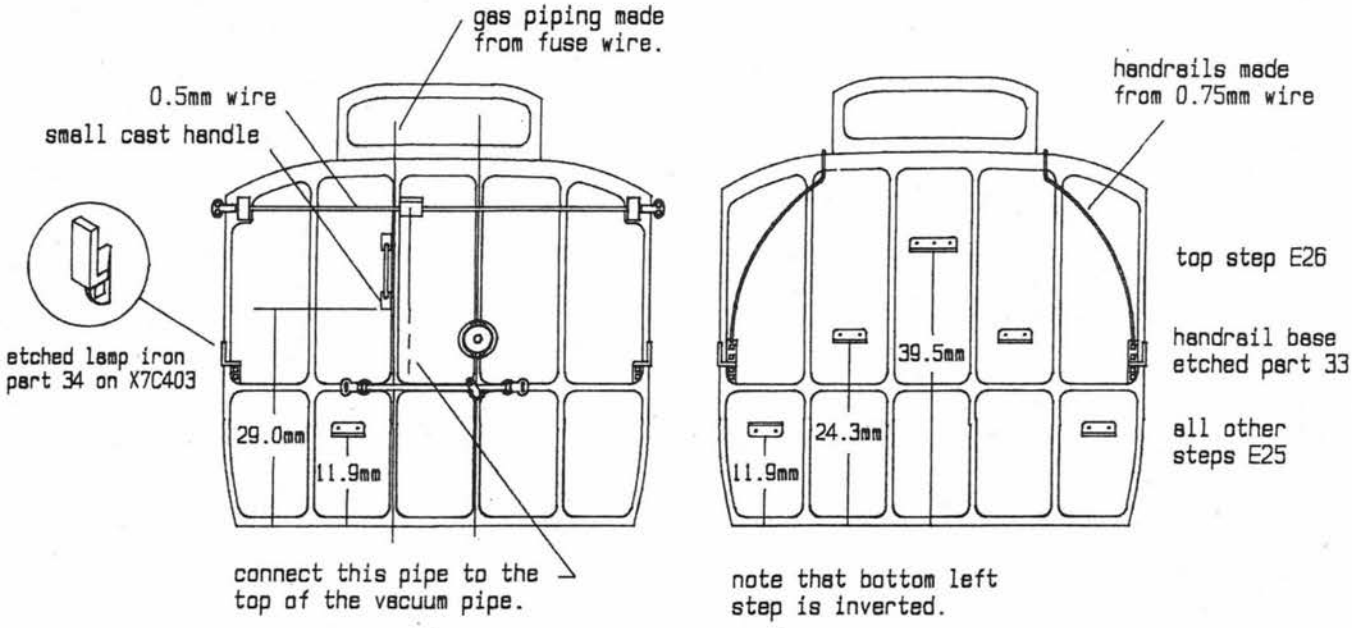

detail 39

49□ Remove the scroll-irons from their sprue and solder a 14BA bolt into the hole in the leg. Cut the head off the bolt and check that the bolt passes through the outer hole in the cast cross-stay, as detail 41. Now glue the scroll-irons into the holes in the solebars and allow to set.

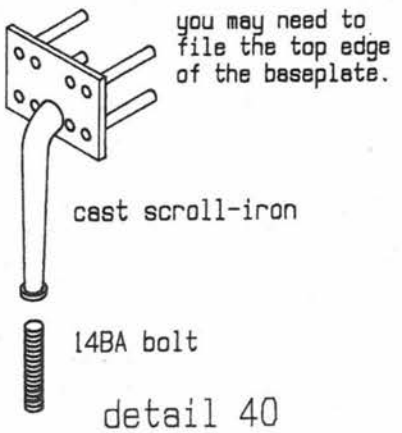

detail 40

50□ Slip the remaining etched rubbing plates (E6) without glue onto the bogie pivot bolts and fit the bogies. Carefully invert the coach and place it on the track. The correct distance from rail top to buffer centre is 23.92mm. This should be achieved by thin plastikard packing pieces between the rubbing plates E6 and the underframe. When satisfied that the coach is at the correct height the bogies can be retained with the 8BA nuts. They should be allowed to rotate freely but be prevented from rocking. Fit the cross-stays onto the scroll-iron bolts and hold in place with the nuts making sure that the suspension rods (pins) locate into the volute spring cups.

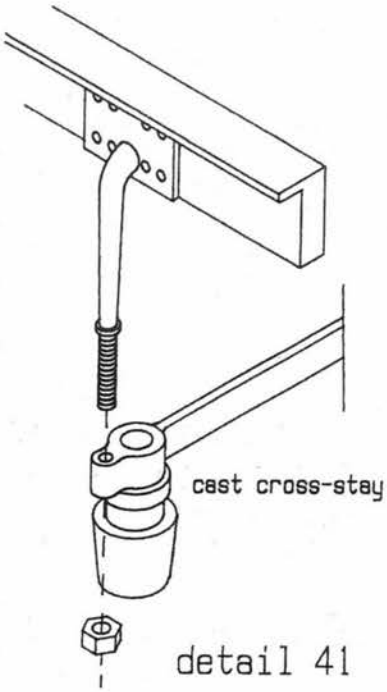

detail 41

51□ Connect up the brake pull rods using the 0.75mm wire supplied. Each end should be fitted with an etched adjuster (E12) and a pull rod linkage (E15). Remember that as the vacuum was released the cylinder dropped and the brakes were released. Don't secure the pull rods to the operating arm at this stage.

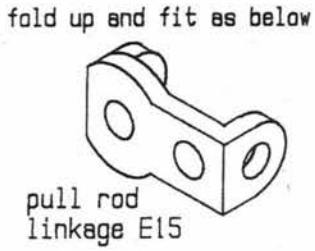

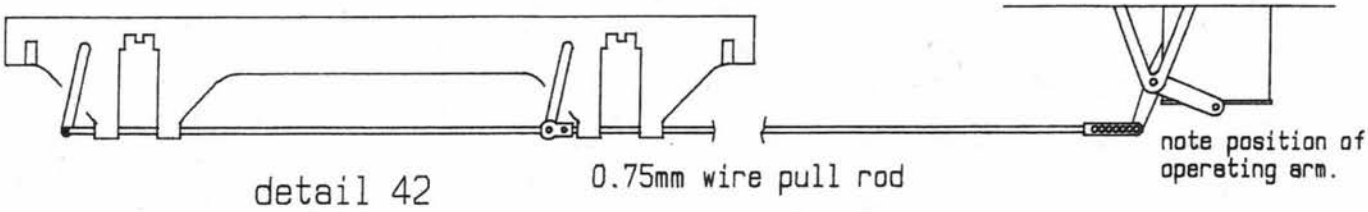

detail 42 0.75mm wire pull rod

52□ Finally, let's look at the fitting of the footboards. There are four hangers on each solebar but the outer two support only the top board and should be cut off below the upper bracket. Fix the hangers to the solebars noting that the pins on the end hangers should be cut short to ensure that they don't protrude beyond the rear face of the solebar and so foul the buffer spring. Remember too, that if you are modelling the coach after the 1920's the centre section of lower stepboard may have been removed, so all the hangers should be cut down.

53□ The footboards can be made up from the black microstrip supplied or alternatively you may like to replace it with wood sections available from a model shop (try model boat and aircraft stockists). The microstrip is supplied in two bundles, in each the narrow strip is for the vertical "upstand" at the rear edge of the step.

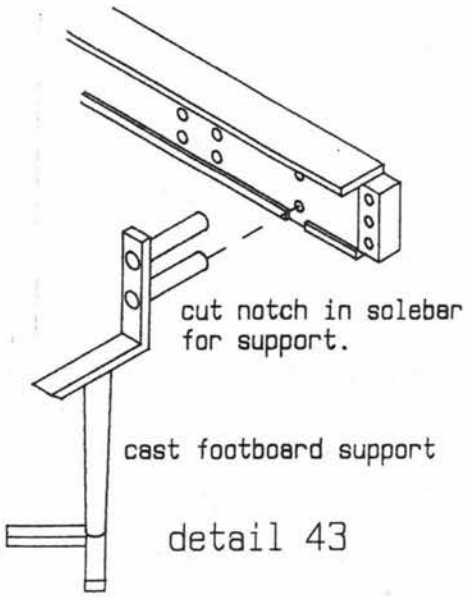

detail 43

If you study the sketch you will notice that the upper and lower boards are different widths and heights. Assembly of the footboards is best done on a piece of glass

note that the end supports are cut short to carry only the upper stepboard.

cutouts are required in both footboards to clear the cast scroll-irons.

refer to historical notes before fitting stepboards.

overall length of upper footboard 321.5mm

1.5mm

95.0mm

4.5mm

5.0mm

additional cutouts required in the lower boards to clear the axleboxes.

detail of cutouts.

note that lower board will not line up with upper.

with the vertical upstands butted upto a metal straight edge. Tape the tread section in position, join them with MEKPAK and leave for 6 hours. Remember to stagger the joins in the lengths of microstrip for greater strength. We are grateful to Model Railway Journal for the use of their drawing.

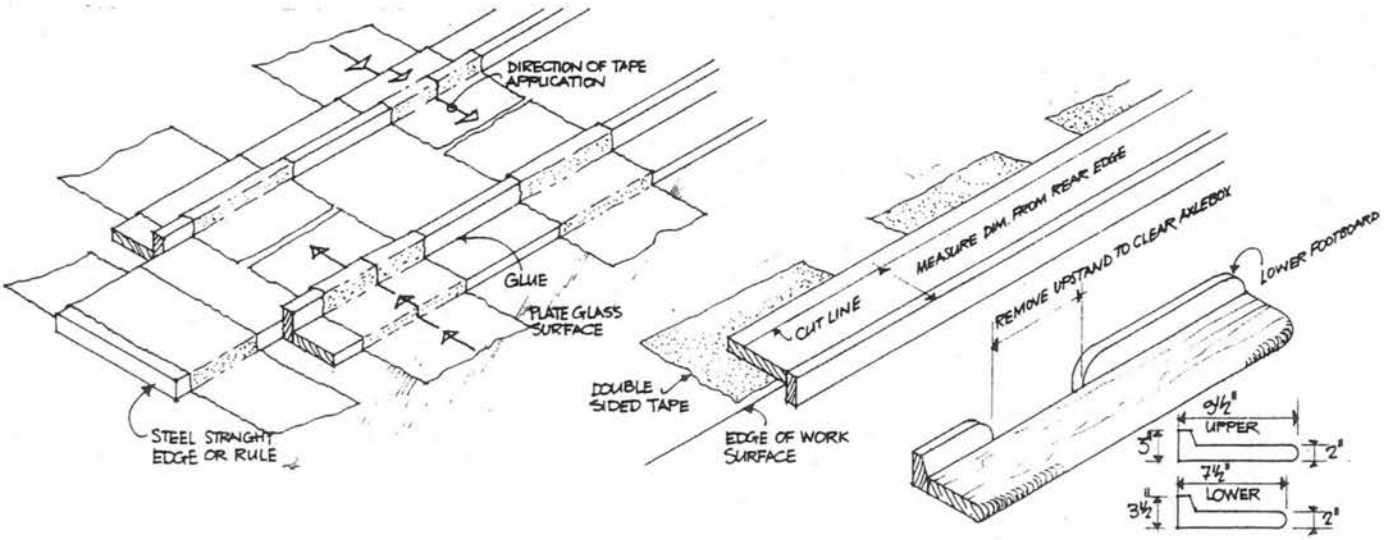

54 ☐ The model can now be painted and some basic livery notes are given on the back page. It is advisable to remove the bogies and roof first. Fit the cast commode handles and door handles after first filing and polishing them. Secure them carefully with cyano being careful not to damage the paintwork. Fix a vacuum pipe to each end of the chassis on the opposite side of the centre to the lamp iron. Glue a connector into one end of the vacuum pipe spring and push the spring over the top end of the pipe. The pipes will look most realistic in a train of vehicles as they can be easily coupled and uncoupled.

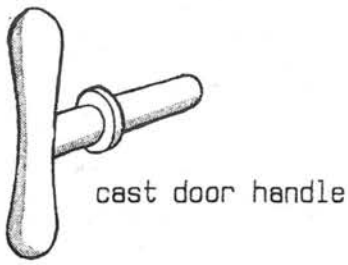

detail 44

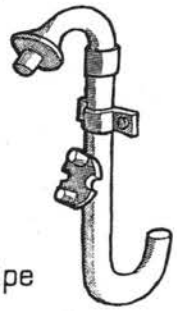

detail 45

cast vacuum pipe

55 ☐ The buffers may have been fitted earlier, if not, add them now. The moulded buffer spring stops should be glued to the end cross-member slightly nearer to the centre line of the coach than the buffers. the springs provided and fit them against the stops; they should take on an "S" shape. Remove the roof and glaze each compartment with the clear plastic taking care not to frost the glazing with solvent.

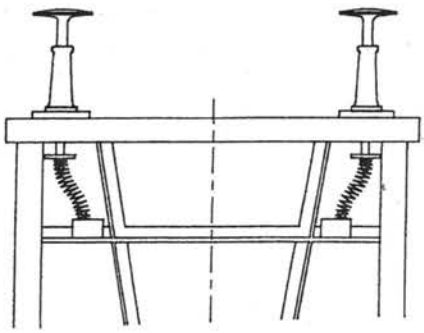

detail 46

56 ☐ Carefully bend the end handrails to shape. These are tricky and reject any unsatisfactory attempts. It is suggested that you glue the rail into the holes in the end only and spring them into the holes in the roof in which case you will still be able to remove the roof when you wish.

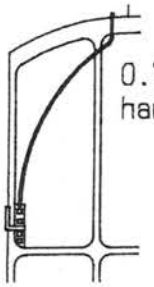

detail 47

57 ☐ Etched hooks (E27 & E28) are supplied for the safety chains on the headstocks but you will need to find some suitable chain with approximately 14 links per inch. Model boat shops usually carry this size. If these were, indeed, fitted they should be 14mm apart on either side of the coupling (not supplied).

58 ☐ You are left with two cast gas gauges and two gas filler valves. We confess to be being unable to give you an exact position for these components except to say that the filler valves are positioned below the solebar in line with the end of the cylinder gass valve and the gauge is mounted directly above the filler valve.

LIVERIES.

There were several distinct livery styles adopted by the Great Western Railway according to the period in question. These styles are dealt with in "Great Western Way" by J.N.Slinn (published by the HMRS,1978) and "Great Western Coaches" by Michael Harris (published by David & Charles,1966 and subsequently reprinted).

Up to 1908
The bodywork was painted in "Windsor Brown" except the panels above the waist which were in creamy white. Clerestory sides were also Windsor Brown and the small panels between the windows picked out in cream. All of the ventilator bonnets on the coach were painted brown with individual louvres shaded to cream at the bottom. During this period the ends and solebars were also painted brown. Ironwork beneath the solebars was black. Droplight frames in the doors and the bolection mouldings were left in varnished wood (mahogany). All the beading was painted black and the roof was white (which would soon weather to very "off white") although some photographs show the lower rainstrip and the area below it to be brown.Lining is somewhat complex to describe and you are best referred to "Great Western Way" or "Great Western Coaches". Essentially this consisted of a fine gold line down each edge of the panelling and a very fine brown line just inside the cream panels. The carriage number would be in the eaves panels and in gold lettering shaded black. Class designations appeared in the waist panel on each door also in gold letters shaded black. The monogram was applied to the lower panels and usually appeared twice per side.
In 1907 a few alternations were made to the livery style and the ends were now painted black. The numbers were moved to the waist panels and a garter totem replaced the monogram.

1908 to 1912.
For repaints and new coaches the two colour livery was (temporarily) abandoned and replaced by all over chocolate described as being of a warmer shade than the previous colour (possibly due to a different type of varnish?). The ends were black and the roof as before but the panelling was no longer painted black. Lining was much the same but it is believed that for a time yellow replaced the gold.

1912 to 1922.
Again the change in style was not particularly dramatic except that the basic colour was changed to lake colour which now included bolection mouldings and droplight frames. The ends and all below the solebars were black. The lining was still in gold.

1922 onwards.
The chocolate and cream livery was reinstated in a slightly simpler form than before with black ends and gold lining. The clerestory sides (including panels) were brown and the windows were painted over. From about 1924 the lining was further simplified with only the waist and lower panels being lined, and from 1927/8 the lining was virtually swept away altogether there now being just a single gold/black line dividing the chocolate and the cream (panelling now not being painted black).

From this time onwards not many carriages survived long enough to be repainted again and anyway there would have been repairs to the panelling giving the carriages a somewhat decrepit appearance! Photographs are the best guide as to how you should paint your model so please consult all you can find. It appears that those that did ended up being painted brown all over with no lining.

SLATER'S
PLASTIKARD

Slater's Plastikard Ltd.
Old Road , Darley Dale , Matlock , Derbyshire DE4 2ER
Phone 01629 734053 Fax 01629 732235
E-mail slaters@slatersplastikard.com