SLATER'S PLASTIKARD

Slater's Plastikard Ltd
Old Road, Darley Dale,
Matlock, Derbyshire, DE4 2ER
Tel: 01629 734053; Fax: 01629 732235
www.slatersplastikard.com

Slater's Coach Kits - **Ref. 7C035**

Midland Railway 43ft Bogie Lavatory Brake Third (altered Diagram 502)

HISTORICAL NOTES

In 1873 the Midland Railway appointed Thomas Gething Clayton as Carriage and Wagon Superintendent; a post he held until 1901. His first task was to replace the ageing coaching stock that then existed. This was done on a basis of a new compartment for each old compartment. However, he also had to address the problem of a shortage of coaches available to meet the traffic demands. By 1878 he realized that time and money (£25 per coach) could be saved by using a plain-arc roof rather than a clerestory type. Thus was born the Clayton arc roof coach. The subject of this range of kits is based on a batch of 43ft coaches built in 1881. These attractive vehicles were developed into a range of carriages with lengths of 40ft, 43ft, 47ft and 54ft!

The Lavatory Brake Thirds were built to diagram 502 from drawing number 515 in 1892. Known running numbers for the Lavatory Brake Thirds were: 537, 1702 and 1708, although it is thought that the numbers 1699–1708 were assigned to these altered coaches.

LIVERY NOTES

Midland Railway.

The sides and ends were painted crimson lake with mouldings picked out in black. On the sides, the edges of the black mouldings were lined in gold with vermilion edging. Yellow was used in place of the gold on the underframe lining. Steps and handrails on the ends were painted black. The roof was grey. Photographs appear to show that the roof was painted black from the outer rainstrip to the edge of the roof.

Until 1902 the solebars and headstock were crimson lake lined in yellow*. Between 1902 and 1912 the lining was deleted and the solebars, headstock and buffer bodies were painted red-brown. After that date the solebars etc. were black. Ironwork under the solebars was black and it is thought that the wheel centers were initially Indian red and later black.

The colour scheme of compartment interiors is described in marvelous detail in 'Midland Style'. The following notes should provide some guidance. First class compartments were panelled with maple and sycamore, the ceiling was white, seats were blue (trimmed with lace) and a blue carriage rug covered the lino floor. The third class compartment was painted in grained-oak finish and varnished, upper parts of side and ceiling were white. Seats were crimson (moquette).

* This information comes from the book" Midland Style" by George Dow, however the Midland Railway Centre at Butterley Derbyshire have a six wheel Clerestory Full Brake Dia 530 awaiting restoration, its building date 1912 is engraved on the chassis. A section of the solebar has been carefully cleaned of the black "Gunge" that it had been painted whilst in departmental use, revealing the original M.R. red with yellow lining underneath. There is no trace of the red\brown livery that according to Mr Dow's book, this solebar should have been painted in. It is possible that the red\brown colour was proposed but not implemented.

LMS (up to 1933)

The livery applied to Midland carriages after 1912 was used on L.M.S. vehicles.

LMS (post 1933)

Lining was simplified with horizontal yellow lines painted along the cantrails and the beading above the windows. Additionally, the upper of the two waist beading strips was painted black, lined yellow on each edge. Circa 1936 coach ends were painted black, but it is doubtful that many of the arc-roof carriages ever carried this style.

Parts List for body/underframe only (ref: 7C035)

Moulded Parts

Part No.	Description	No. of Sprues	Check
X7CM3301	Side Module: guard's compartment	1	
X7CM3302	Side module: third class (middle)	4	
X7CM3303	Side module: third class (end)	1	
X7CM3305	Side module: lavatory	1	
X7C01002	Coach end (plain end)	1	
X7C01003	Coach end (with gas fitting detail)	1	
X7CM3307	Floor (half moulding)	2	
X7CM3308	Underframe	2	
X7CM3310	Partitions (3 reqired)	1½	
X7CM3310	Partitions (lavatory)	1	
X7CM3311	Roof (half moulding)	2	
X7CM3317	Solebar and Headstock	2	
X7C01018	Gas cylinders	2	
7203	Seating	5	
X7C01008	Coach Door Vent Bonnets	2	

Etched Parts

X7C3302	Footboards (upper and lower)	As packed	
X7C3304	Vee hangers and brake linkages		
X705402	Buffer clips		
X7C012MR	Coach end detail		

Miscellaneous Parts

71567	Midland Railway coach buffer set	1	
X71567	Buffer bases and buffer blocks	1	
7163	Springs (vacuum hoses)	2	
—	Plastiglaze strip 11½" x 1"	3	
1213	0.020" (0.5mm) brass wire x 12"	3	
1214	0.030" (0.75mm) brass wire	2	
1215	0.040" (1mm) brass wire x 6"	1	
—	1/16" brass tube x 3"	1	
—	0.040" x 0.040" Microstrip	4	
—	0.020" x 0.030" x10" Microstrip	1	
—	Working screw couplings (pair)	1	

Casting Parts (as below)

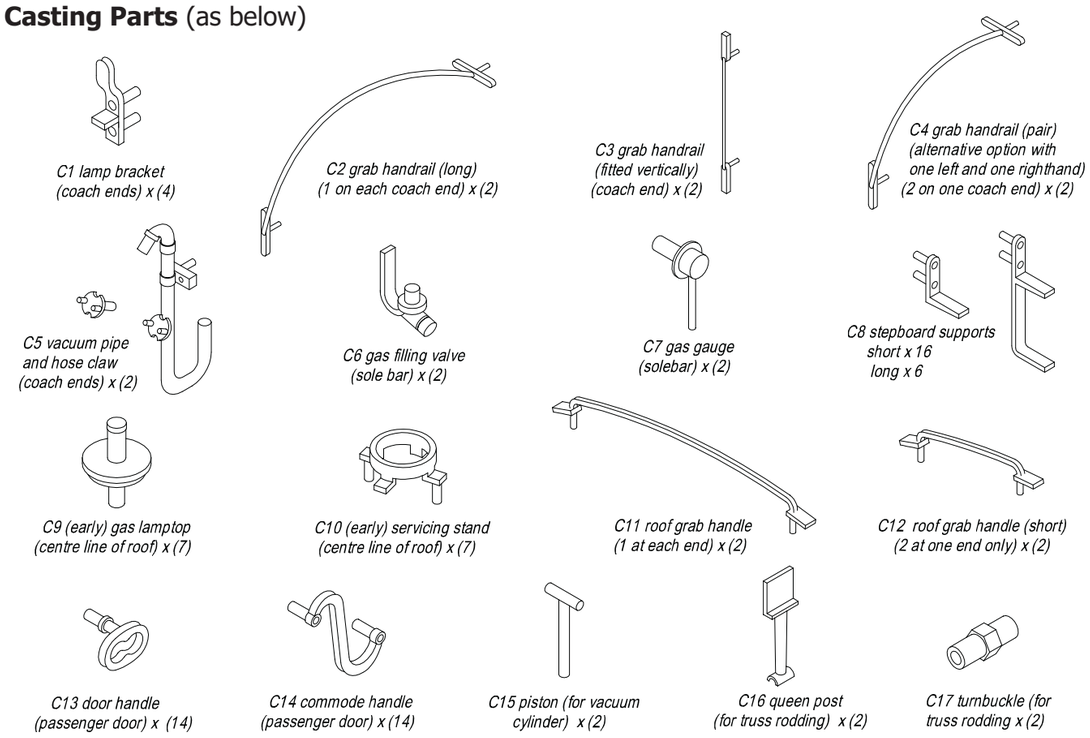

HEALTH AND SAFETY

White metal. All white metal contains lead in small quantities. Always wash your hands after touching white metal, and do not allow children to play with it.

Glass Fibre Pencil. While not dangerous or harmful, the fibres can be irritating if they stick in your skin. It is advisable to wear gloves. Damage can be caused if fibres flick into your eyes, so it is necessary to wear safety spectacles. Do not to rub your eyes when using glass fibre.

Other Tools and Adhesives. Be careful with sharp tools such as knives and drills, and carefully observe Health and Safety instructions on adhesives and paints, particularly spray paints.

PREPARATION NOTES

Cleaning up Lost Wax Brass Castings. As required, remove pieces from sprues with a piercing saw and finish off with a fine file. Parts may need straightening; this is easily achieved with the fingers. Remove any blemishes with a file and finish with a quick polish with a glass fibre brush.

Preparing the White Metal Castings. Clean off moulding 'pips' and parting lines with a scalpel blade or file. Use an old file specially reserved for this job, because it will be spoilt for any other use.

WORKING WITH A 'MODULAR APPROACH' TO BUILDING COACHES

The sides of this coach kit are supplied as a series of injection moulded plastic modules. These parts should be glued together on a flat, smooth surface such as glass or Formica that will not soak up or stick to the adhesive being used. It is important that all the modules are parallel to each other and lined up along the lower edge. The best way to ensure this is to fix a metal straight edge to the work surface. Do not use excessive amounts of adhesive and allow the assembled sides to harden, undisturbed, for no less than 12 hours before they are moved.

PAINTING AND FINISHING

You will find it easier to paint some parts before beginning construction. Ensure that parts are thoroughly clean, dry and free of grease. Metal parts should be cleaned with a glass fibre brush as the slight scratching helps the paint to key. Everything should be washed with a mildly abrasive kitchen cream cleanser. Use an old toothbrush to work into the corners and crevices. When it is clean, rinse in clean water. Once thoroughly clean and dry do not handle the model except with surgical gloves or tissue paper/kitchen roll. Leave to dry before applying the primer. Cover with a clean cardboard box to protect from dust.

Assembling the coach sides

The construction of these coaches is based on detailed injection moulded modules joined in combinations to produce various types of railway carriages. This method is possible with these forty three foot coaches because the full size vehicles were based on standard components. Figure 1 below shows the (left and right hand) end third class compartment modules that locate onto the ends of the coach. Note how the outer edge has a rebate that will locate into the end of the coach.

Figure 2 illustrates the guard's compartment as used as part of a brake third carriage.

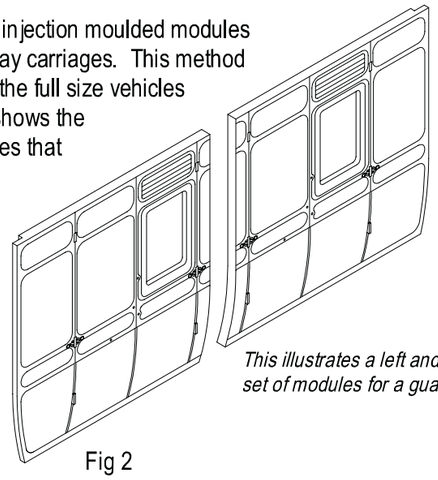

This illustrates a left and right hand set of modules for a guard's brake end.

Fig 2

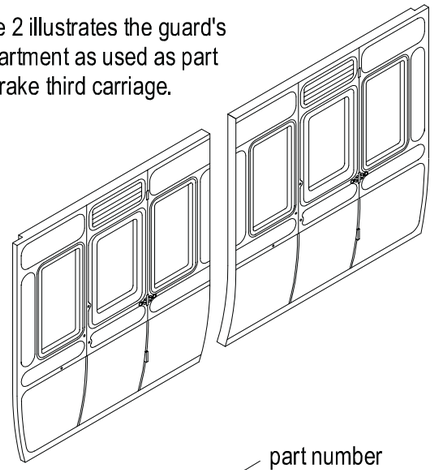

Fig 1

Each module has a part number on the rear face as shown in fig 3. The raised ribs in the back of the parts are used to locate the strips of glazing material.

This kit for a Midland Railway 43 foot lavatory brake third will use the following modules to make up each side of the coach:

2 x X7CM3301 Third class compartment (end)
4 x X7CM3302 Third class compartment
1 x X7CM3501 Lavatory compartment

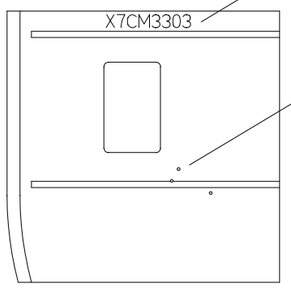

Fig 3

This illustrates the rear face of a typical module. In this case it is a guard's compartment with a rebate for the end running down the left side.

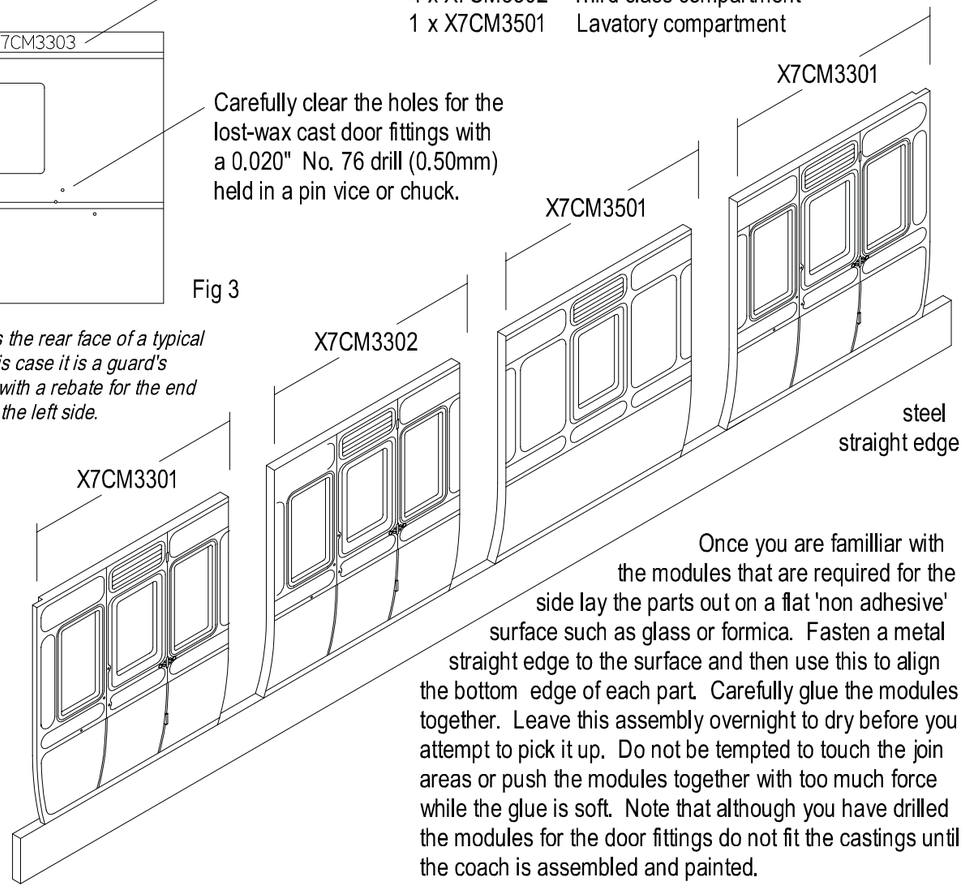

Fig 4

Once you are familiar with the modules that are required for the side lay the parts out on a flat 'non adhesive' surface such as glass or formica. Fasten a metal straight edge to the surface and then use this to align the bottom edge of each part. Carefully glue the modules together. Leave this assembly overnight to dry before you attempt to pick it up. Do not be tempted to touch the join areas or push the modules together with too much force while the glue is soft. Note that although you have drilled the modules for the door fittings do not fit the castings until the coach is assembled and painted.

Add the detail to the roof of your coach

Let's start with the roof grab handles. The most common arrangement was to have one handrail (that followed the curvature of the roof) at each end as shown in plan view in fig 20. If you modelled the end, as in fig 19, with both handrails on one end of the coach, the roof grabhandles should be the shorter type (and both fitted at the step end).

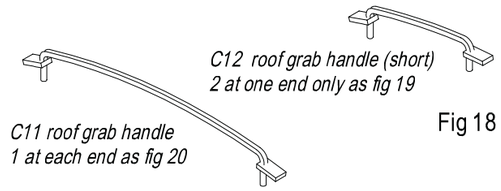

Fig 18

Next, the rainstrips should be added. They are represented by 0.040" x 0.040" (1mm x 1mm) Microstrip. The full size drawings at the middle of these instructions shows the positions for the four rainstrips.

The lamptops are shown in the (partial) drawing of the roof in fig 20. This also shows the layout for the gas pipe to the lamps. This is a 'single pipe' arrangement as used on early gas lighting. The later piping with a supply to the pilot light is illustrated on the centre pages. The gas pipes are made from 0.020" (0.5mm) brass wire and sit on small blocks of 0.020" x 0.030" microstrip. The blocks should be cut to a length of 0.10" (2.5mm).

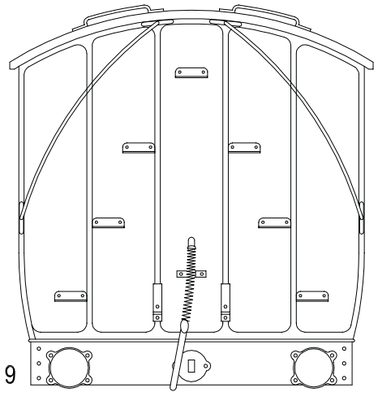

Fig 19

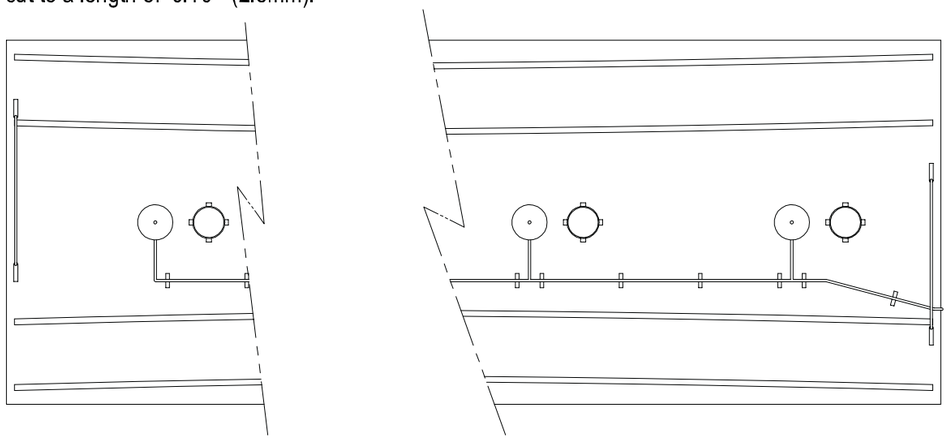

Fig 20

The lamptops and fittings that appear on the roof of a Midland coach give clues to the casual observer as to the build date of the coach and, in many cases, show that the vehicle has undergone a lighting re-fit. The historical notes supplied with the kit should help to explain this. In this kit you are given the 'early' type gas lamp (casting C9) and the servicing stand C10 (as fig 21a).

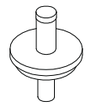

Fig 21a

C9 (early) gas lamptop

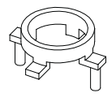

C10 (early) servicing stand

The later gas lamptop is shown in fig 21b on the right. These, and the later servicing stand, can be supplied if preferred for £3.50 p & p (for a set of 7).

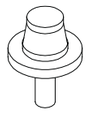

Fig 21b

(later) gas lamptop

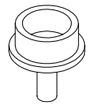

later servicing stand

As originally built, these coaches were fitted with oil lighting. During daylight hours the coaches sometimes ran with the oil lamps removed and a cover plate in their place. When the oil lamp was installed the cover plate travelled on the servicing stand. We can supply cast oil lamps and cover plates for £3.50 p & p (for a set of 7).

Fig 21c

cover plate (for lamp hole)

Adding the stepboards and the buffers

The first step here is to fit the cast stepboard hangers (C8) to the solebars. You will notice that there are 'short' hangers that carry only the upper stepboard. These hangers are fitted (in pairs) over the wheels. The lower board in this area is carried by the bogie. The remaining 6 stephangers fit, 3 per side, between the bogies.

Carefully drill a hole 1/8" (3mm) in the floor in each compartment. These allow for equalization of air pressure inside the coach. This is important and should be done whenever you construct a sealed volume.

The upper board is a full length board. The short lower boards have a small 'upstand' along the back edge that must be folded up, as in fig 16a.

The appearance of the boards will be further enhanced if you carefully shape the front edge to represent the rounded edge on the prototype.

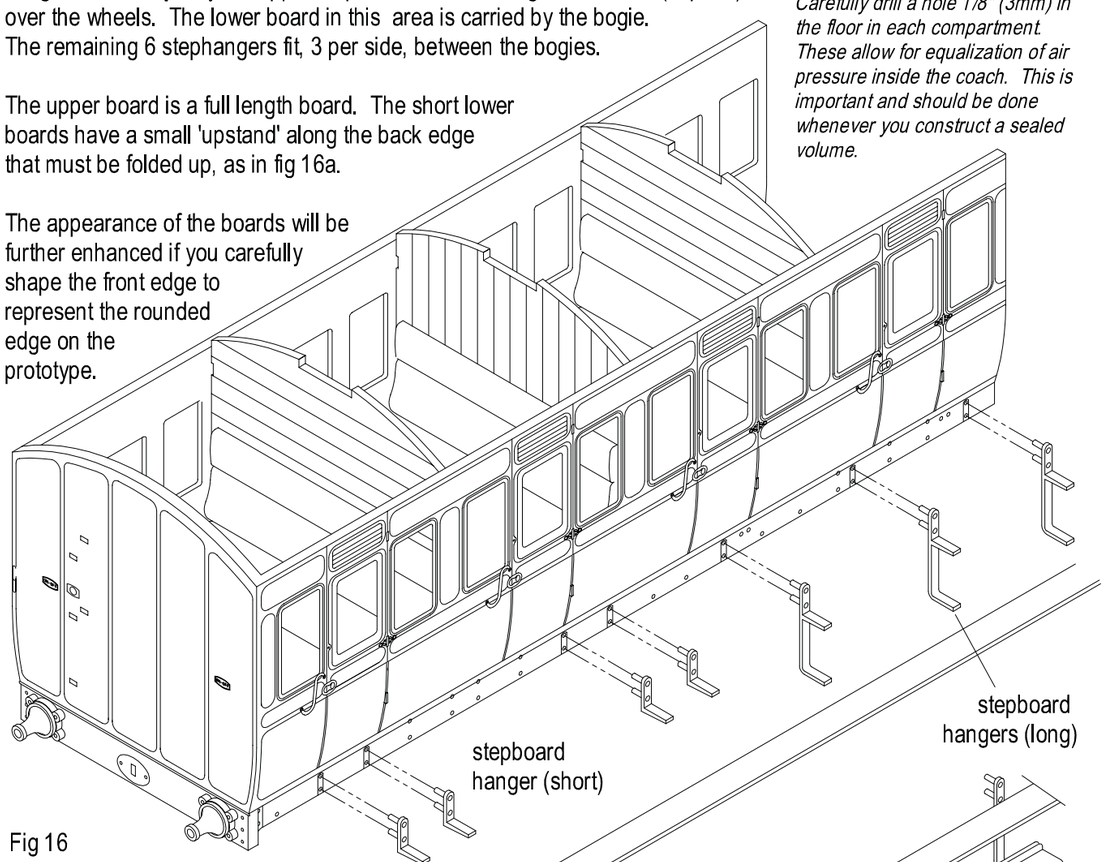

Fig 16

Fit the castings (2 of each) illustrated below. Both locate near the centre of the coach. The filler valve tucks up behind the solebar and the gauge sits on the outside face.

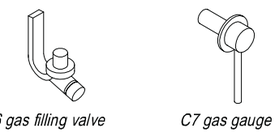

C6 gas filling valve *C7 gas gauge*

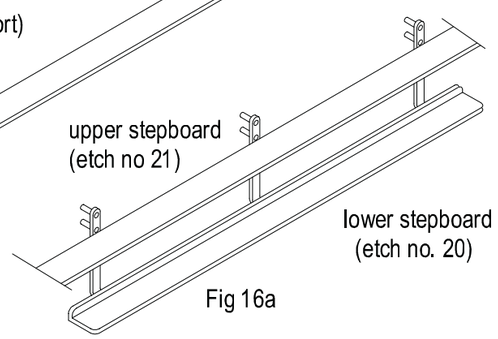

Fig 16a

Your coach is nearly complete; the next page will show how to detail the roof. This is a good time to paint the coach body and underframe. Door handles (casting C13), commode handles (C14) and buffers should be added after the painting is complete.

When fitting the buffers glue a small plastic 'lug' or buffer spring stop behind the solebar, as fig 17. Slide the buffer into position and carefully glue an etched 'clip' into the groove on the buffer. The buffer spring fits between the 'lug' and the clip on the buffer and will push the buffer clip up against the headstock.

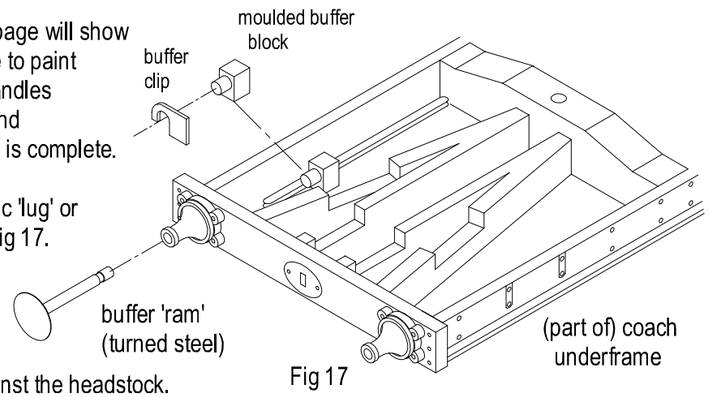

Fig 17

Floor and underframe assembly

Carefully remove the two (half) floor mouldings from their sprue and remove any flashing. Note that the parts have a thin 'flange' on three of their edges. This is NOT flashing, but beading that projects out from under the sides and ends of the vehicle.

Place the floor parts on your 'flat surface' and glue them together as shown in fig 5. Make sure that the are nicely aligned and then leave the floor to harden. In fig 5 the floor is shown upside down; the ribs down each side will be used to locate the moulded solebars.

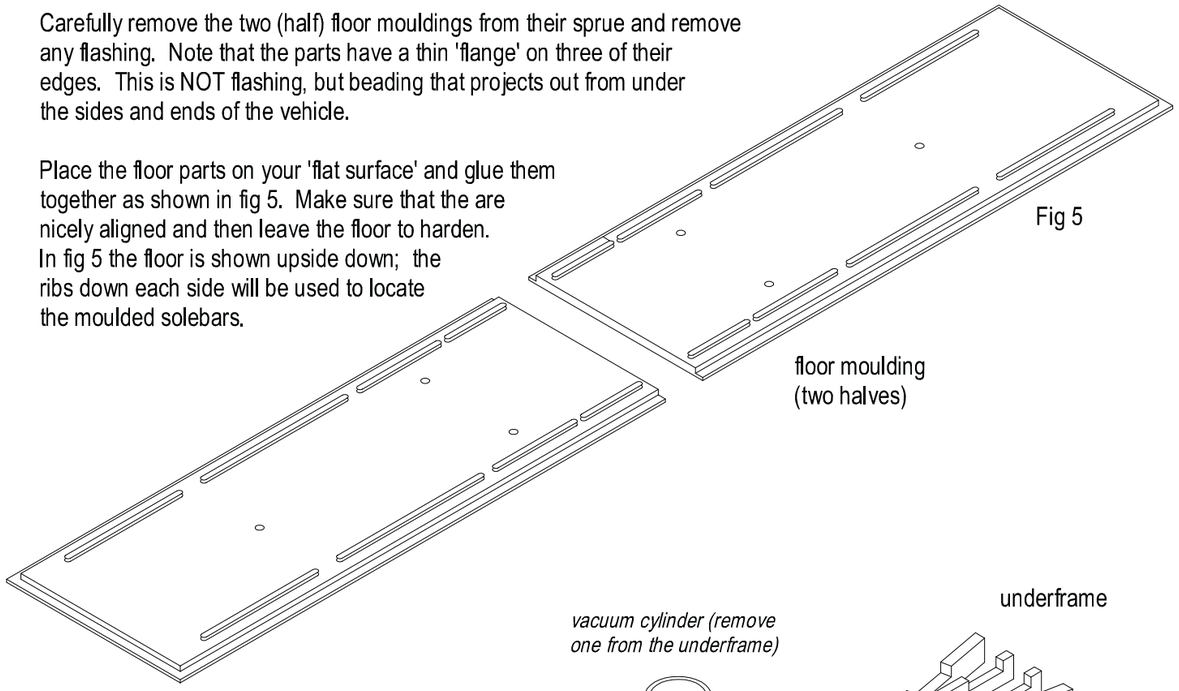

Fig 5

Now take the two (halves) of the moulded underframe and, working on the 'flat surface', join them together as in the figure below. On these Midland coaches the vacuum cylinders were mounted on the same side of the vehicle. One of them (shown as a phantom image) will have to be carefully cut from the underframe and re-positioned.

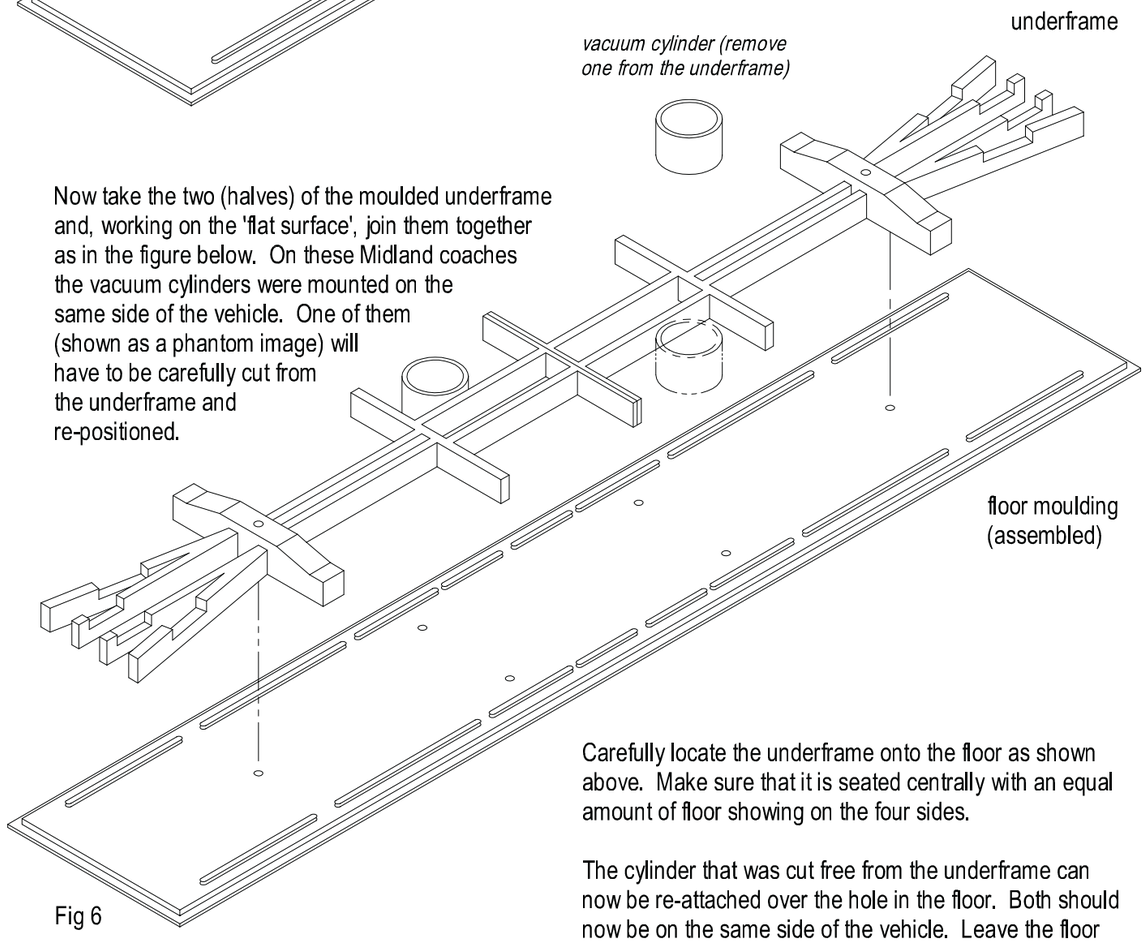

Fig 6

Carefully locate the underframe onto the floor as shown above. Make sure that it is seated centrally with an equal amount of floor showing on the four sides.

The cylinder that was cut free from the underframe can now be re-attached over the hole in the floor. Both should now be on the same side of the vehicle. Leave the floor undisturbed until the solebars and headstocks have been attached.

Fit the moulded solebars to the locating ribs on the underframe unit. Also add the two headstocks. Note that the holes in the headstock (for the buffers) sit below the centre line of the headstock when the coach is sitting on the track. Figure 7 shows the underframe inverted.

Leave the assembly to dry and move onto figure 8. Take the two coach sides that you have built up and the two coach ends and assemble them into a 'box'. Don't forget to drill out the holes for the cast door handles and commode handles 0.020" (0.5mm) no. 76 drill. Read the notes below before you begin this step.

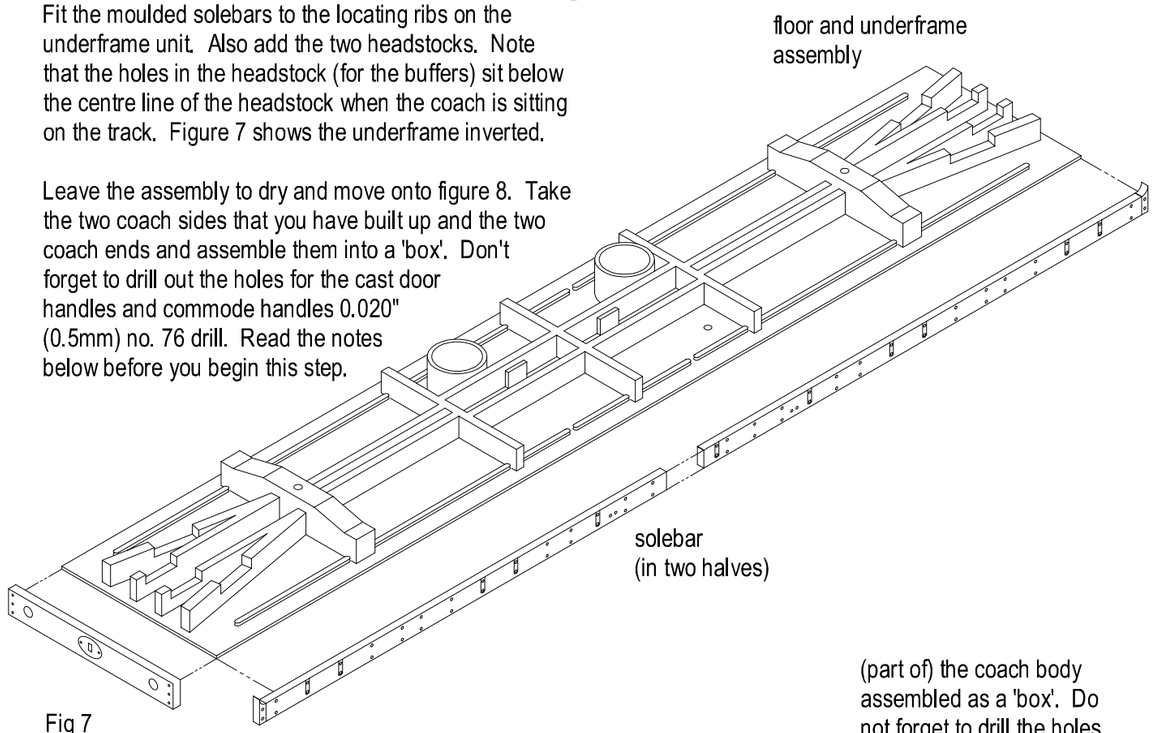

Fig 7

Note that the coach ends differ slightly in the detail that is moulded onto the panels. Fig 8, below, shows the end that carries the gas control lever and valve. You will be adding etched detail parts later on. On a Composite or All 3rd coach it does not matter which end goes where. However, if your are building a brake third or brake composite it seems to be common practice for the gas control equipment to be on the guard's end of the coach.

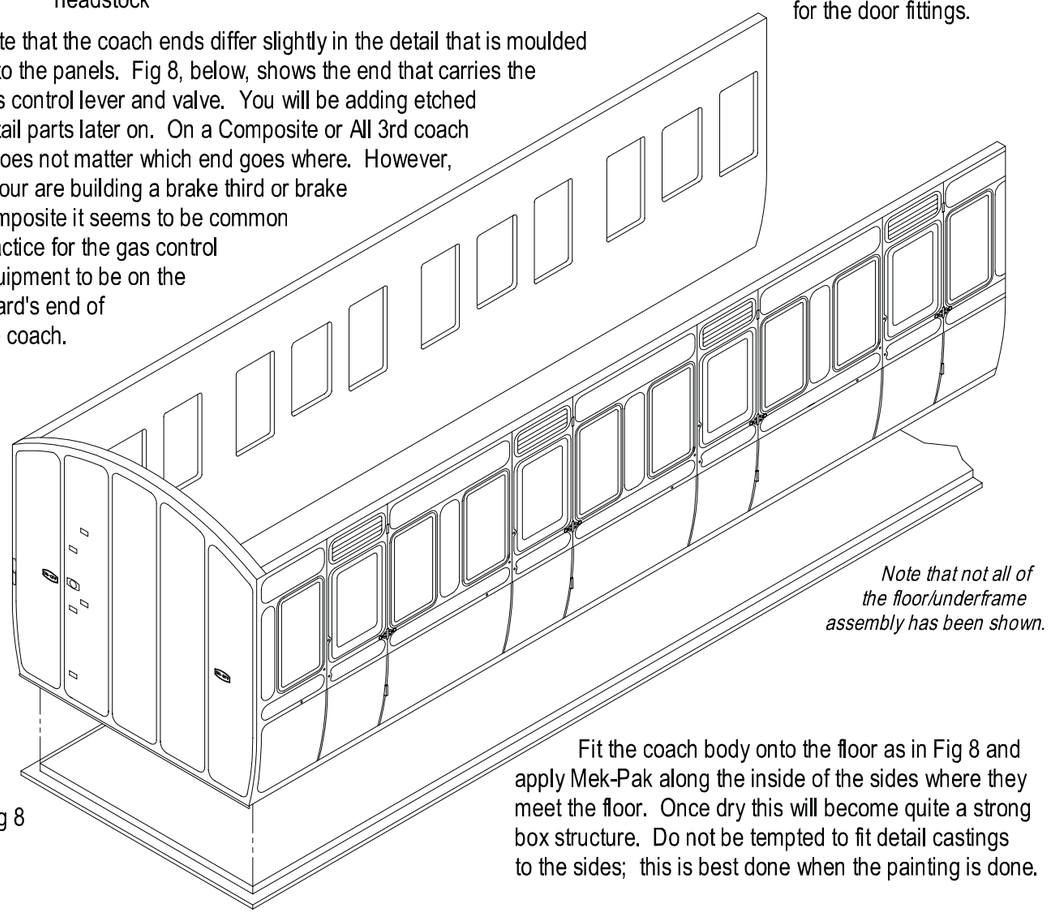

Fig 8

Fit the coach body onto the floor as in Fig 8 and apply Mek-Pak along the inside of the sides where they meet the floor. Once dry this will become quite a strong box structure. Do not be tempted to fit detail castings to the sides; this is best done when the painting is done.

Brake cylinder and queen post assembly

Let's consider the vacuum cylinders first. They should be removed from the sprue where they are moulded with the underframe. Fit the circular bottom plate to the cylinder, as in fig 16. The cylinders should be attached to the floor into the holes provided.
Actually there are four holes but you must fit the cylinders so that they are on the 'same side' of the floor.

Make up the two (moulded) gas cylinders provided and glue them to the underside of the floor on the opposite side of the coach (behind the solebar). The cylinders were not fitted when the coaches were originally built with oil lighting.

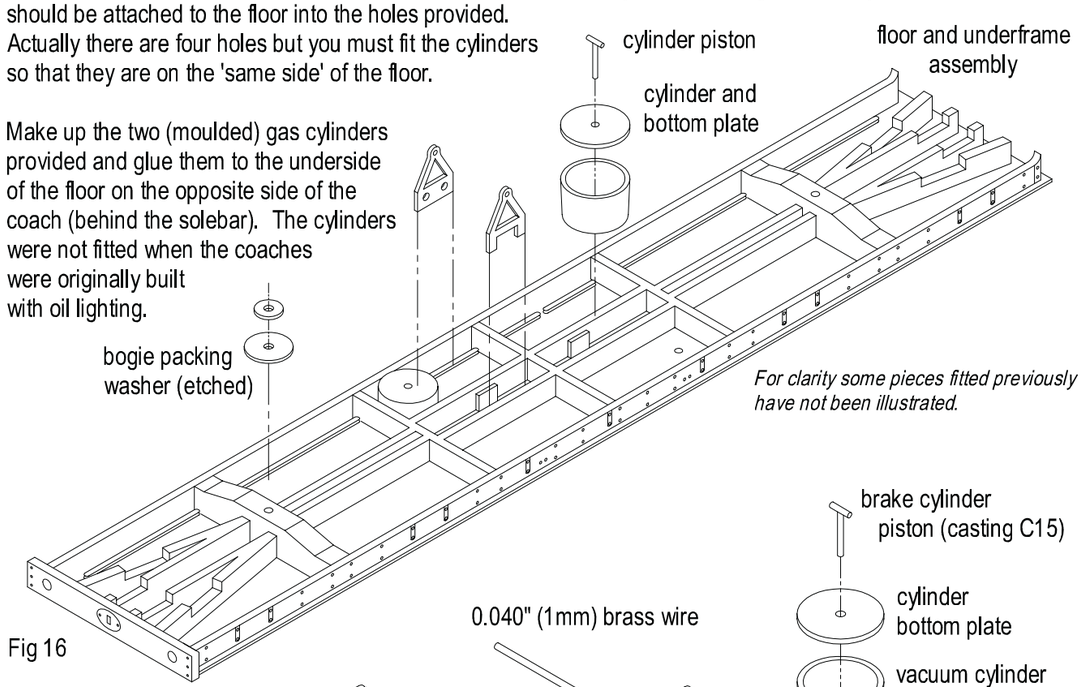

Fig 16

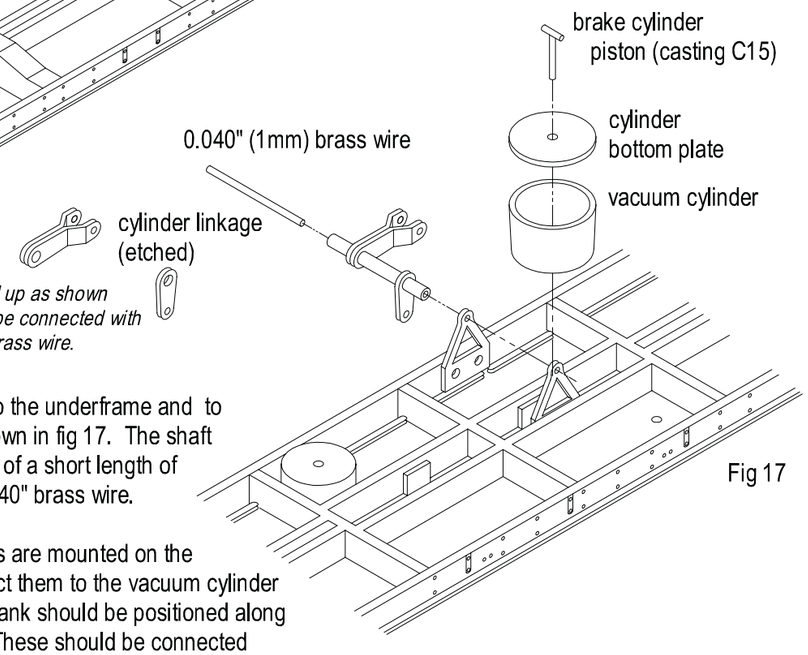

The linkage parts should be folded up as shown
The short actuating arms need to be connected with a short length of 0.020" (0.5mm) brass wire.

Fig 17

Fit the etched 'Vee' hangers to the underframe and to the back of the solebar as shown in fig 17. The shaft between the Vees is made up of a short length of brass tube over a piece of 0.040" brass wire.

Make sure the etched linkages are mounted on the shaft as in fig 17, then connect them to the vacuum cylinder piston. The short actuating crank should be positioned along the centre line of the coach. These should be connected together with a piece of 0.020" brass wire. When the bogies are fitted a brass wire pull rod should run from each of these cranks to the two bogies.

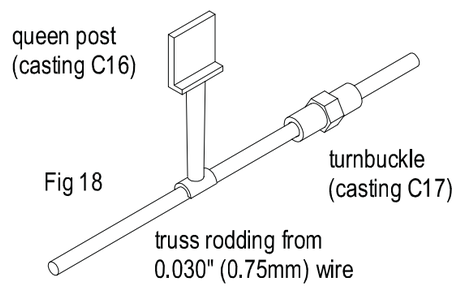

Fig 18

Fit the two cast queen posts (C16) to the rear face of the solebars. They will locate between small raised ribs at the centre of the coach. Coaches of 43 foot length or less tended to have just one queen post on each side. Longer vehicles generally had two per side.

Use the 0.030" (0.75mm) brass wire supplied to make the truss rods. The ends of the rods fit between angled ribs behind the solebars. Don't forget to slide one of the cast metal turnbuckles (C17) onto the wire. Note in fig 18 how the truss rodding is held by the queen post.

Adding the detail to the coach ends

You will notice that the coach ends are not the same; one has moulded detail for the gas control gear. This end is shown in fig 12. The other end should appear as fig 14. Note that each end has a curved handrail (C2). This was the most common arrangement. However, some coaches had both handrails at one end as in fig 13. In this case use castings (C4) with the gas shut-off mounted at the other end.

Also note that fig 12 shows a 'two pipe' gas supply. The main gas supply runs straight up the end to the gas lamps on the roof. Half way up the end the pipe to the pilot lights branches off. If you are fitting your model with the early gas lamps (casting C9) omit the pilot light supply.

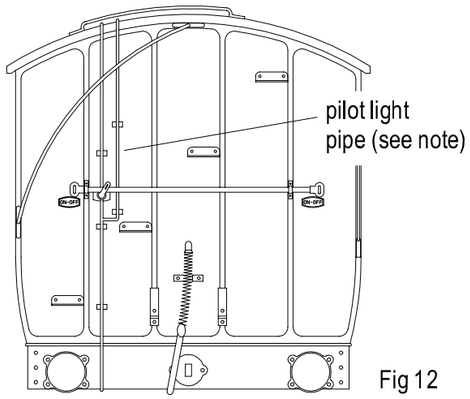

Fig 12

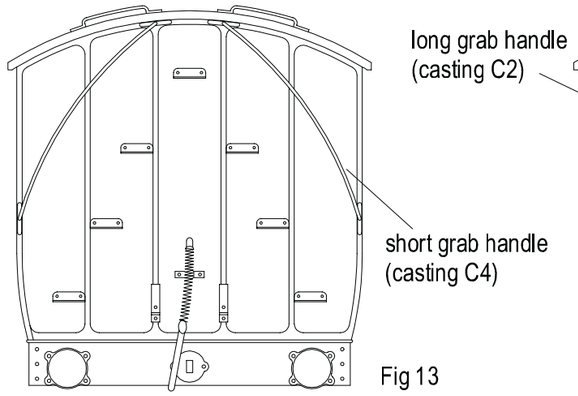

Fig 13

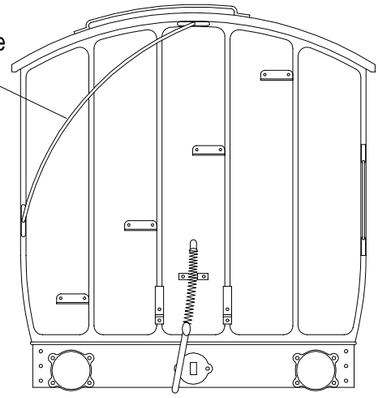

Fig 14

You can now add the rest of the detail to the ends. This is illustrated in fig 15 on the right. Don't forget the short (cast) vertical grab handle on the right hand edge of the end. Fig 15 also illustrates the locations for the curved grab handle, steps and the two lamp brackets. These parts will have the same layout on each end of the coach. The steps and the gas control bar are etched parts (found on fret X7C012-MR).

Use a piece of the 0.020" (0.5mm) brass wire for the gas piping. Omit the second pipe if not required for a single pipe gas supply (see notes above).

The castings (C5) for the vacuum pipes should now be fitted to the ends. The small 'claw' should be glued into the steel spring that represents the flexible hose that connects coaches. The (turned steel) buffer 'ram' is also shown here but it is best to leave them off until the model is painted. The fitting of the buffers is illustrated in fig 17 on page 11.

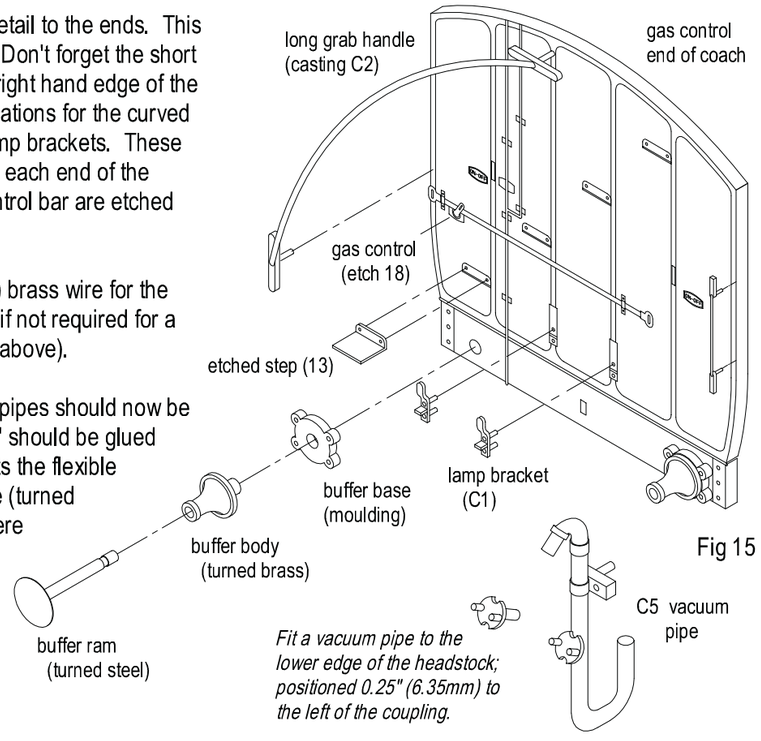

Fig 15

Add the partitions and seats

You can now add the moulded partitions inside the coach body. These will be postitioned at the point where the coach side modules are joined together. The addition of the partitions and seating adds cosiderably to the strength of the model.

Note that the partitions are slightly notched to clear the ribs that run along the inside of the sides. These raised ribs will locate the strips of glazing material when they are fitted to the coach.

Refer to the notes below for the assembly of the moulded seating.

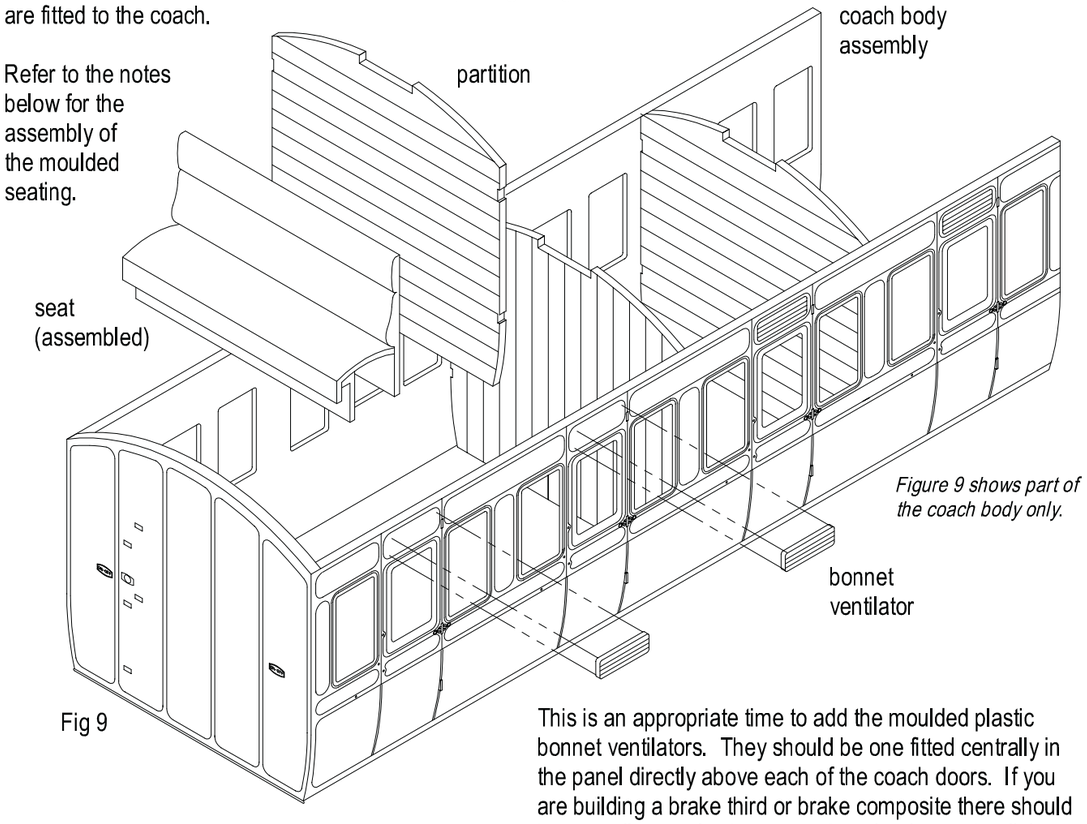

Figure 9 shows part of the coach body only.

Fig 9

This is an appropriate time to add the moulded plastic bonnet ventilators. They should be one fitted centrally in the panel directly above each of the coach doors. If you are building a brake third or brake composite there should be a ventilator only above any door that has a droplight.

Take the moulded seating as supplied in the kit. Each sprue of parts will be sufficient to make seating for one compatment.

Assembly is straight forward and is illustrated in figure 10. You will notice that on the underside of the seat there is a groove. This has been provided to guide your modelling knife. If you are making third class seating you will need to trim the seat along this groove. Third class seating was not as deep as that in the first class compartments! Leave the seats 'as supplied' for your first class passengers.

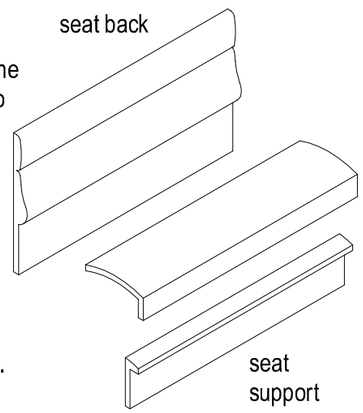

Fig 10

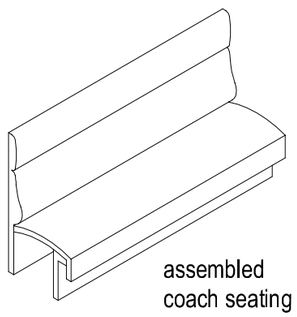

Fig 11

Plan view of your coach

These drawings of your 43ft Lav Brake Third are reproduced at 7mm/ft to aid the building of this kit. The side view shows the overall length of the coach and also the correct layout of the coach side modules. Use this drawing, in conjunction with figure 4 (on page 3), when assembling the coach sides. Obviously the rear side (not illustrated) will have to be the mirror image of the side as shown here.

The notes below will explain more about the coach ends and the roof detail.

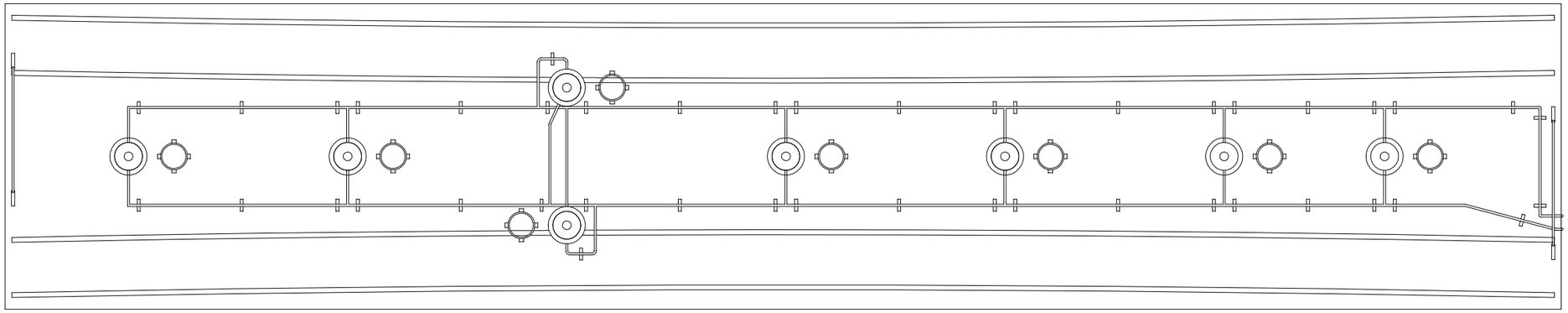

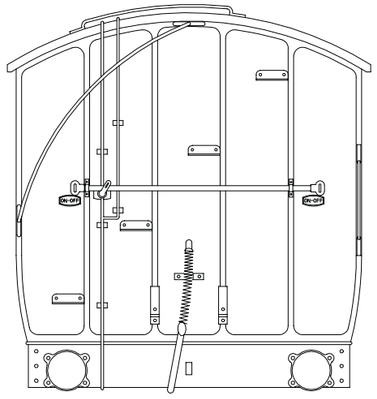

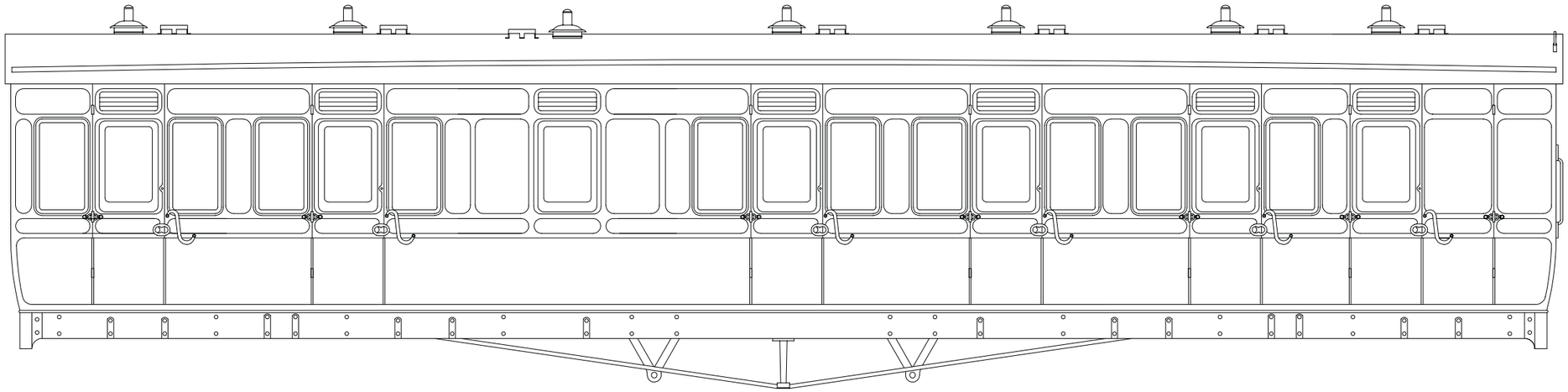

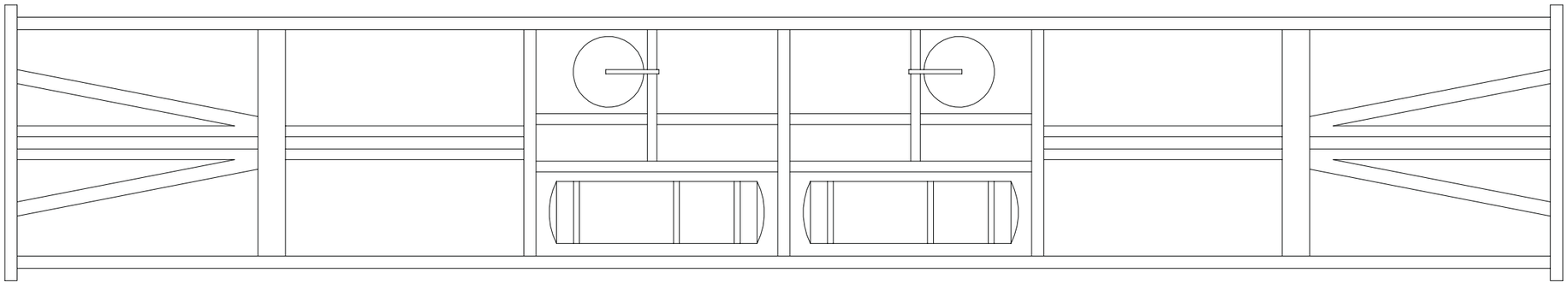

The drawing above shows one of the coach ends. Please refer to page 9 for detailed notes and illustrations concerning the fittings that need to be added. It is very likely that the end shown above, with the gas shut-off, was at the guard's end of the carriage (if such accommodation was supplied).

Take special note of the positions for the vacuum pipe and the small lamp brackets. These castings sit on either side of the vacuum pipe. Locations for the various steps and handrails are also illustrated.

The layout of the underframe shows the two vacuum cylinders mounted behind the solebars on the same side of the carriage. Opposite them you can see the pair of gas cylinders. These were fitted when the coaches were converted to gas lighting.

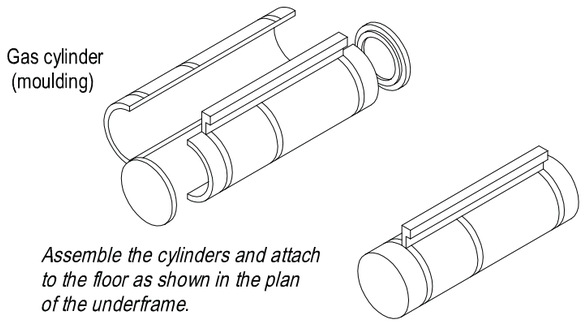

Assemble the cylinders and attach to the floor as shown in the plan of the underframe.

Plan view of the coach roof

Study the drawing (at the top of the page) for positions for the various fittings on the roof. Notes are also supplied on page 12 of the instructions. It is advisable to add the four rainstrips before you fit the lamp detail. Do take your time when making rainstrips from the 0.040" x 0.040" Microstrip. They should follow a long smooth arc as shown. The offset or displacement at the centre is approx. 0.060" (1.5mm). Photographs of Midland Railway coaches appear to show that the roof (outside of the outer rainstrip) was painted black.

The roof plan also shows the grab handle casting (C11) that should be fitted at each end of the roof. The gas piping runs underneath the grab handle.

The plan shows a two pipe layout, as fitted with a pilot light supply. Refer to figure 20 on page 12 for the layout of a single pipe arrangement. The lamp tops should be positioned centrally in each compartment. Use the plan to mark off the positions of the lamp tops and drill holes of 0.052" (1.32mm) or No. 55 drill.