7C021E

Important Note:
These instructions cover the version of this kit with "Plastic" bogies. The instructions for the "Etched" bogies are covered in a separate leaflet which is enclosed

S.R. 28 Ton BOGIE VAN B

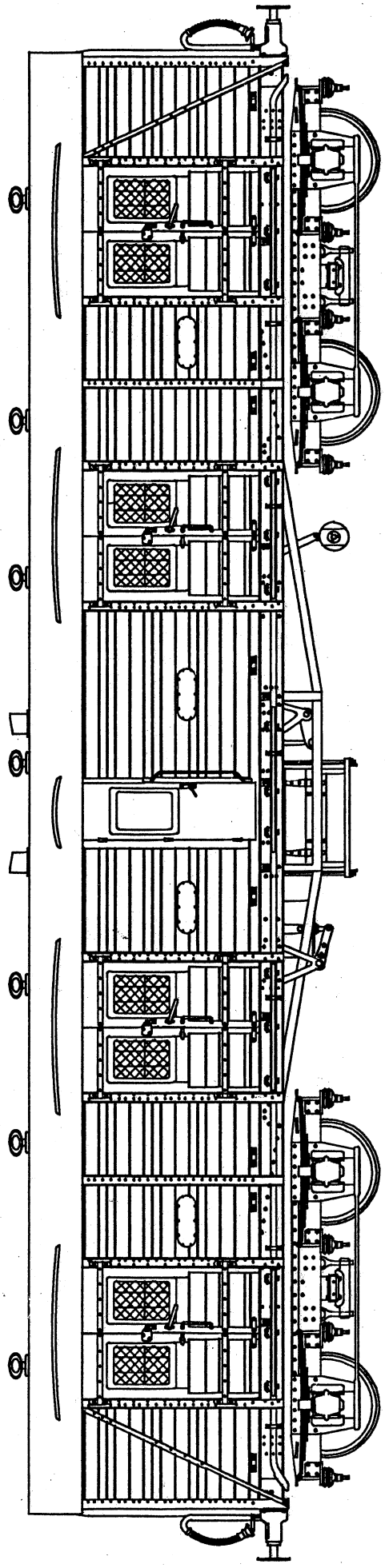

INSTRUCTIONS

7C021E

7C021E CHECK LIST

ETCHINGS	AS PACKED		X 1	
CASTINGS	AS PACKED		X 1	
7125	WHEELS		X 4 AXLES	
7154	BEARINGS		X 8	
PLV	TRANSFERS		X 1	
X715643	BUFFER SET		X 1	
7163	VAC SPRINGS		X 4	
X715442	HORNBLOCKS		X 8	
7160	WAGON BUFFER SPRINGS		X 8	
3/32nd	BRASS TUBE	1/2"	X 1	
1/16th	BRASS TUBE	4"	X 1	
8BA	BRASS SCREWS		X 2	
8BA	STEEL NUTS		X 2	
30 THOU	BRASS WIRE	12"	X 5	
20 THOU	BRASS WIRE	12"	X 2	
8" X 1"	PLASTIGLAZE		X 1	
20 X 30	MICROSTRIP	10"	X 1	
20 X 60	MICROSTRIP	10"	X 2	
20 X 80	MICROSTRIP	10"	X 5	
50 THOU	RODDING	14"	X 1	
MOULDINGS				
X7C021A	SIDE A		X 2	
X7C021B	SIDE B		X 2	
X7C021C	ROOF		X 2	
X7C021D	FLOOR		X 2	
X7C021E	ENDS		X 1	
X7C021F	TRUSS RODS / SOLEBARS		X 2	
X7C021G	DYNAMO / CYLINDER ETC		X 2	
X7C021J	SPRINGS / AXLEBOXES		X 2	
X7C021K	BOGIE BRAKES		X 2	
X7C022F	PARTITIONS		X 1	
(7C021E)	INSTRUCTIONS			
(7CB4E)	BOGIE INSTRUCTIONS			

Bogie Van B Amendment for fixing Bogies to Floor

Two 8BA nuts have been included in this kit which are slightly too large to fit in the recess in the top of the floor, before commencing assembly, position a nut over the recess and tighten a 8ba screw up from underneath to draw the nut into the recess and tighten a 8ba screw up from underneath to draw the nut into the recess Remove the screw leaving a captive nut. If desired a drop of superglue may be trickled around the nut to secure it in place. (Make sure that the glue is kept

7C021

HISTORICAL NOTES

The SR Bogie Guards Vans (coded Bogie "B") were built in three batches the first two batches by the SR in 1938 and 1939 and the last batch by BR in 1952. The only difference in the BR built versions and the earlier SR versions was that the planking on the doors was slightly different and the 'V' hangers were placed on the right hand side of the vehicle when looking at the side instead of on the left as for the SR batches.
It is not possible to build the BR versions from this kit unless one is prepared to re-scribe the planking and move the 'V' hangers.

The vehicles went through very little change during their lifetime the most obvious being the gradual removal of the torpedo vents and the periscopes in BR days and the fitting of a stove and the associated pipe in the guards compartment in addition to the steam heating that they were built with. Also the tall vacpipe was sometimes replaced by the short type in BR days. The first batch, Nos 395-9 had stoves fitted by 1944 and Nos 380-94 had also been fitted by 1946. Nos 370-79 had been fitted by 1950 and two more Nos 368/9 were fitted in 1962. In 1966/7 another twenty eight were fited, Nos 201/3/5-30 and finally No 231 in 1968. To distingush between stove and non-stove vehicles the SR painted the guards door below the window and the top four planks of each panel orange.
In SR days the stove fitted vans were not allowed to work off the Southern Railway but the remainder travelled far and wide especially in BR days. Where examples were seen as far north as Edinburgh and Carstairs.

LIVERY

When built the vehicles were painted in the SR green livery with black ends, underframes and bogies. The roofs were painted grey. Lettering was in gold shaded black execpt for the word Luggage which was in yellow. After 1938 the word "Railway" was deleted but this would only be carried out when vehicles went through the shops for repair.

From Nationalistion BR introduced the "carmine" livery for the sides with black ends, underframe and a grey roof. The lettering was in yellow.
In 1956 the Southern Region of BR started painting their vehicles green again to the same specification as the SR execpt that the green was a slightly darker shade. The lettering was still in yellow.

Finally in 1967 the vehicles started to be painted in the new Matt Blue livery on the sides and ends with a grey roof and a black underframe it also had small white lettering. It should be pointed out that these vehicles were rarely cleaned and once out of the paint shops quickly became filthy all over. It should also be pointed out that these vehicles would only be repainted when going through the shops after a major overhaul and vehicles were often seen in the previous livery several years after passenger coaching stock had all been repainted in the new livery.

For example No S399S was photographed at Dover in 1971 still in the 1956 green livery. It was also noted that the vacuum pipe had been painted red. This would be a "Bright" idea from The Health and Safety Executive in an effort to stop railway staff trying to connect Vac Hoses to Air Brake Hoses. Whether this idea was vigerously carried out is not known. Certainly it would not be necessary until air brake stock became common.

INSIDE LIVERY

In SR days the inside of the vans were painted pale green with a white roof. The stove (in those vans fitted with one) was painted purple brown. Drop lights and other wooden framing to the windows were varnished, probably teak.

In BR days the walls were finished in a reddish brown with a white ceiling. Woodwork in the guard's compartment was cream with matt black panels around the stove.

Further information can be obtained from Railway Modeller April 1974 issue,Model Railway Constructor December 1996 issue and Model Railways January, 1988. Maunsell's SR Steam Passenger Stock 1923-1939 by David Gould (Oakwood Press) contains some useful information.

CONSTRUCTION.

With this kit we have attempted to show by a number of exploded drawings the position of the various components rather than a long description of how to assemble the kit, however we hope these few notes will prove useful.

RECOMMENDED TOOLS.

The following tools are recommended to aid you in the assembly of this model.

1. A good sharp knife. We recommend a "Swann-Morton" No 3 surgical scalpel with No.10 and 10a blades.

2. Needle files. Flat, round and square are all you should need. No.2 cut we find is most suitable for plastic.

3. Tweezers. To help you locate small parts.

4. We recommend Slater's Mek Pak liquid cement adhesive and our Mek Pak brush to apply it with. DO NOT USE TUBE CEMENT OR SOME OF THE MORE VISCOUS LIQUID CEMENTS as due to the thin cross sectional area of the plastic mouldings these adhesives can continue working through the plastic and cause distortion of the plastic surface.

5. A set of instrument pliers with good square jaws to bend the etchings with.

6. A set of sharp sidecutters.

7. A set of taper broaches - to clean out the small holes in the etchings.

8. A small pin chuck to hold the various number size drills listed in the drawings.

9. A tube of Loctite (Cyanoacrylate Adhesive).

10. A roll of masking tape.

SLATERS PLASTIKARD LTD

DOOR HANDLE X 8

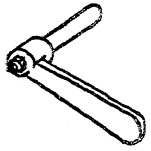

DOOR LOCKING HANDLE X 8

DOOR GRAB RAIL X 8

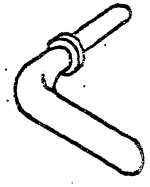

GUARDS DOOR HANDLE X 2

COACH END GRAB RAILS X 4

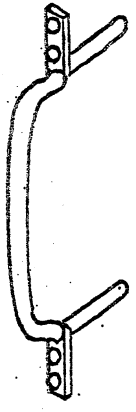

GUARDS DOOR GRAB RAILS X 2

VAC PIPE CLAW X 4

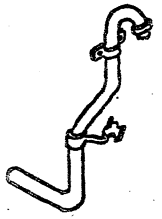

S.R VACUUM PIPE X 2

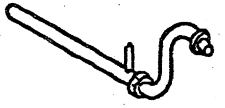

B.R. VACUUM PIPE X 2

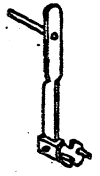

VACUUM PIPE LOCATING BRACKET
(B.R. VACUUM PIPE ONLY) X 2

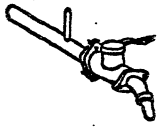

STEAM PIPE X 2

Lost-Wax Brass Castings

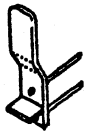

LAMP IRONS X 4

STEP SUPPORTS X 30

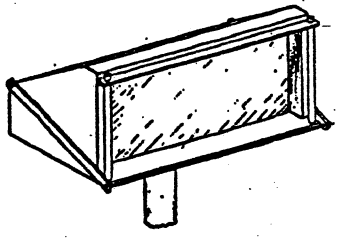

PERISCOPE X 2

VENTS X 7

White-Metal Castings

1. Due to the long length of the kit the parts have had to be moulded in Two Halves. You will need a good flat surface to lay the various parts on whilst joining them together. LEAVE THE JOINED HALVES FOR AT LEAST AN HOUR TO ALLOW THE JOINT TO HARDEN.

2. Drill out the various holes for the Lost Wax fittings and check that the parts fit correctly into their respective holes. It is not advisable to fit the lost wax parts at this stage.

3. Most modellers leave the painting to last, however it is much easier to paint the sides and ends at this stage before the glazing and components have been fitted to the sides. The ONLY precaution is to ensure that you DO NOT paint the surfaces which have to be joined. Cover these with masking tape FIRST.

4. If you have painted the sides whilst "In the flat" you can now fit the glazing and window Bars/Mesh. Study the drawing No 1 and note the correct positioning of the mesh and the bars. The mesh and bars are etched in pairs and are correctly spaced, when assembled correctly they will line up with each other and with the door windows. First fasten a piece of masking tape tacky side upwards onto a flat surface, now place the fine mesh onto the masking tape, the adhesive on the masking tape will stop the mesh from moving around, next place the bars ontop of the mesh and align correctly, using a pin put a small drop of loctite between the two halves so that they bond together. Use the loctite very sparingly or you will simply fill in the fine mesh and spoil the etching. Once the two halves have been correctly bonded together they can be painted white. If you do not have a spray gun then buy a white aerosol can from a car spares shop and carefully spray two or three light mist coats onto each side. Allow each coat to dry before applying the next coat. Once dry fit the assembly to the insides of the doors. The heavy bars go directly behind the glass, with the mesh on the inside of the vehicle.

5. When fitting the "V" hangers note that the two hangers fastened to the solebar are "joggled". To give them strength fold into the crease and then run a fillet of solder into the crease. The guards brake "V" hangers are smaller than the other sets and the bearing head is offset from the "V". When fixing the inner"V" hangers using the plastic packing use a piece of 30 thou brass rodding and push through both "V" hangers align the INNER "V" hangers to the outer one so that the rodding is square across the chassis and parallel to the floor in height.

6. The transfers supplied with this kit are off the "pressfix" type. To fix, carefully cut through the tissue paper around the transfer and peel off from the thick backing paper. Then press the letter down in the correct postion on the body and wet the tissue paper, leave for a minute and then gently peel the tissue paper away from the letter.

SLATERS PLASTIKARD LTD

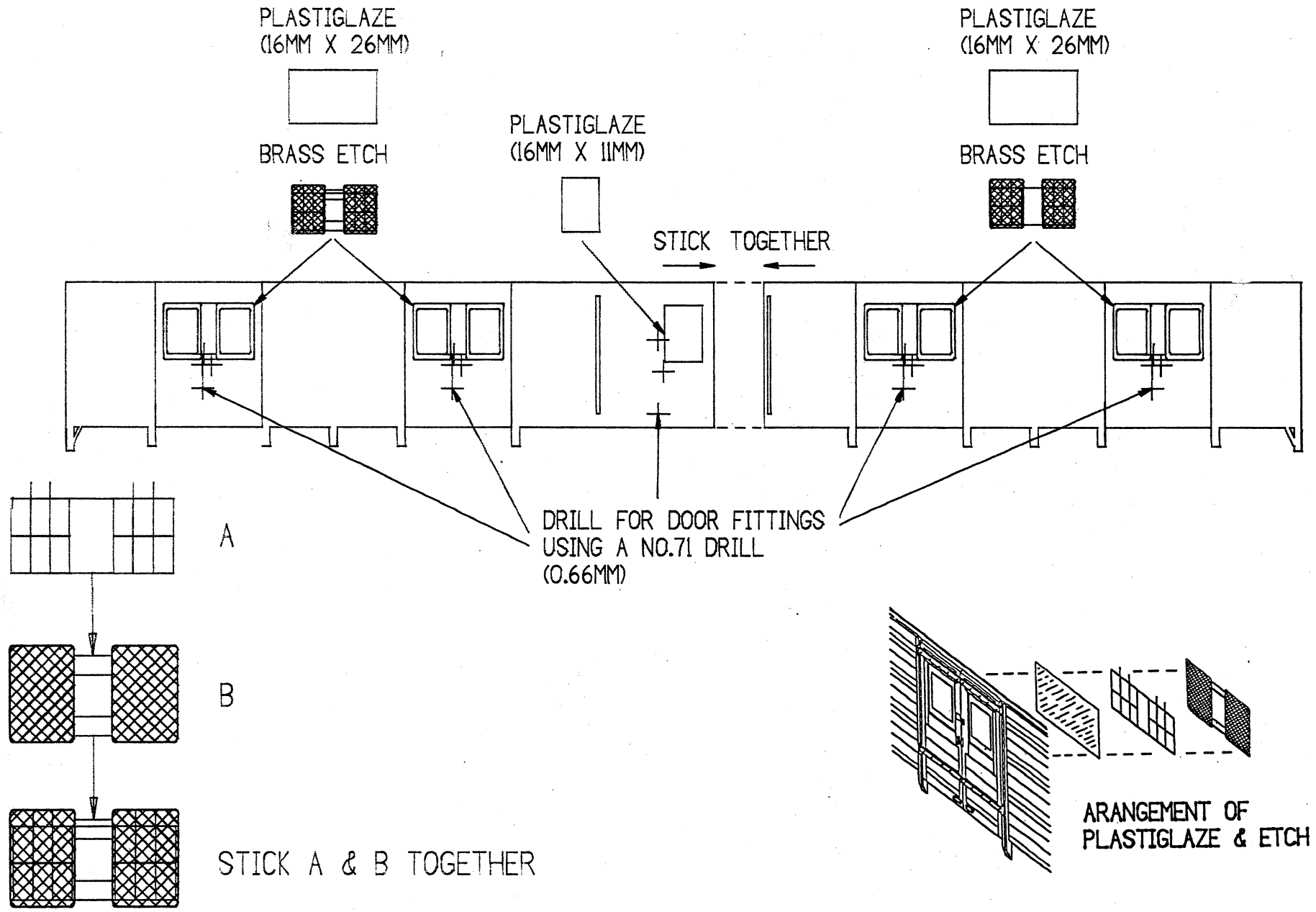

FIG.1

SLATERS PLASTIKARD LTD

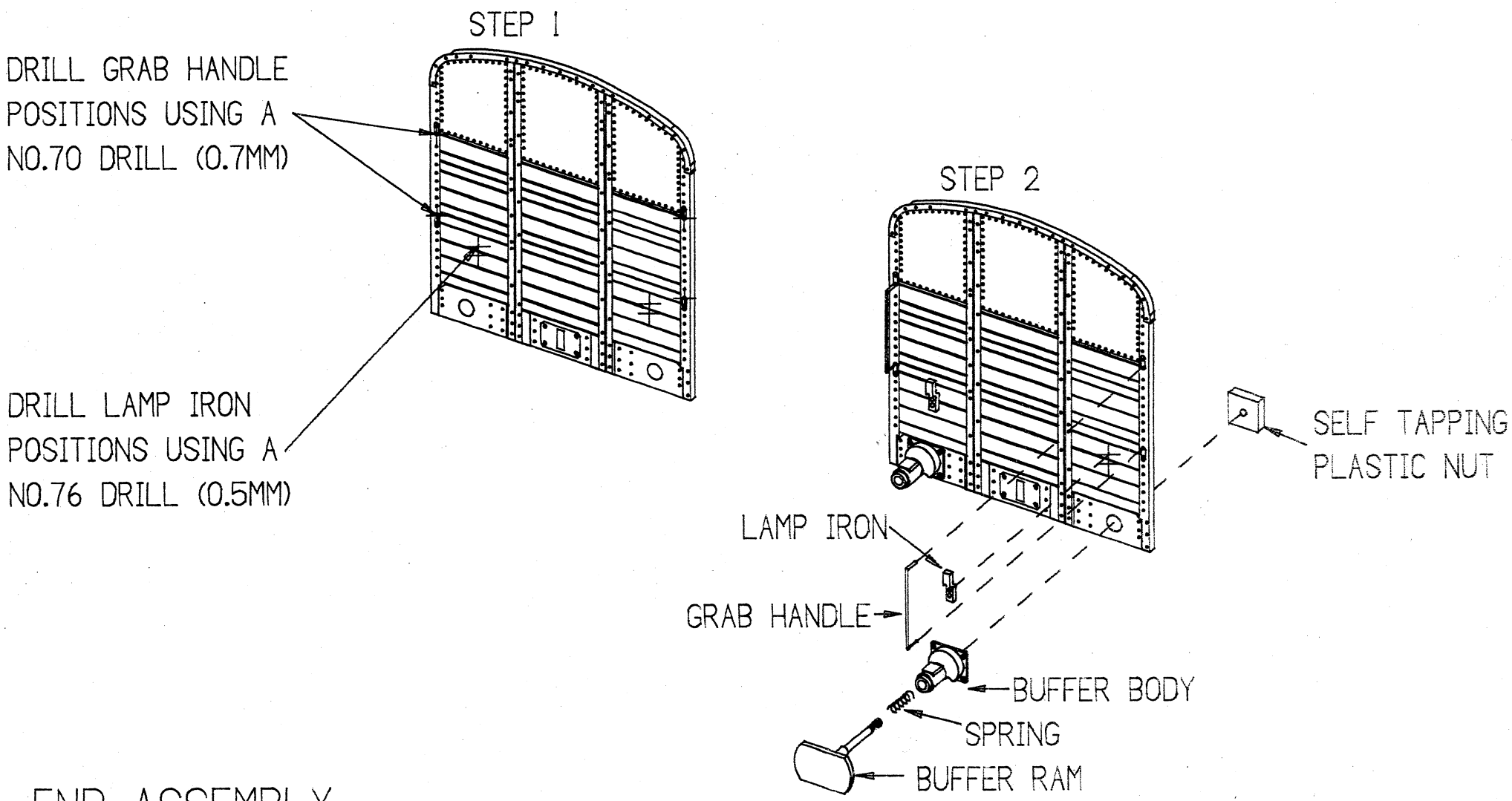

END ASSEMBLY

FIG.2

SLATERS PLASTIKARD LTD

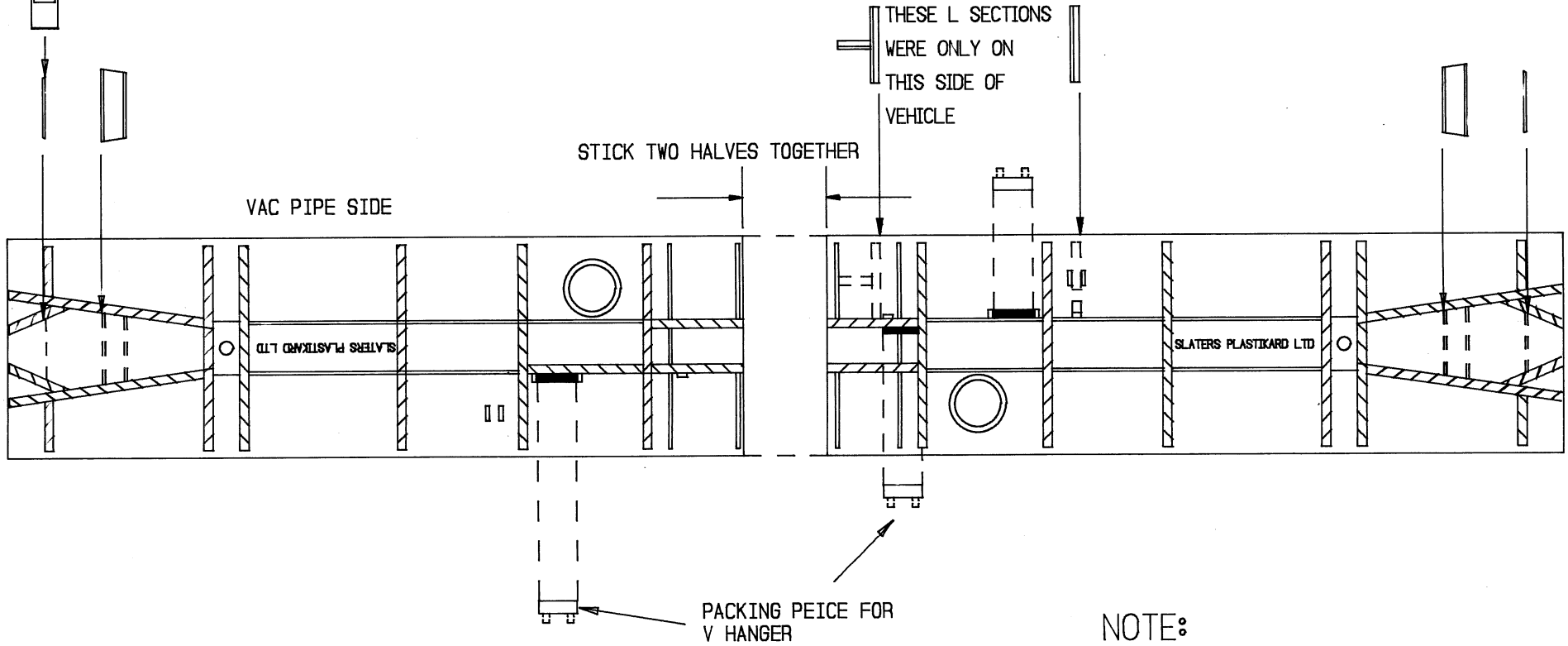

NOTE:
ALL STEEL WORK WHICH IS CROSSHATCHED STICK 0.020" X 0.080" MICROSTRIP WHICH IS PROVIDED.

UNDERFRAME ASSEMBLY

FIG.3

SLATERS PLASTIKARD LTD

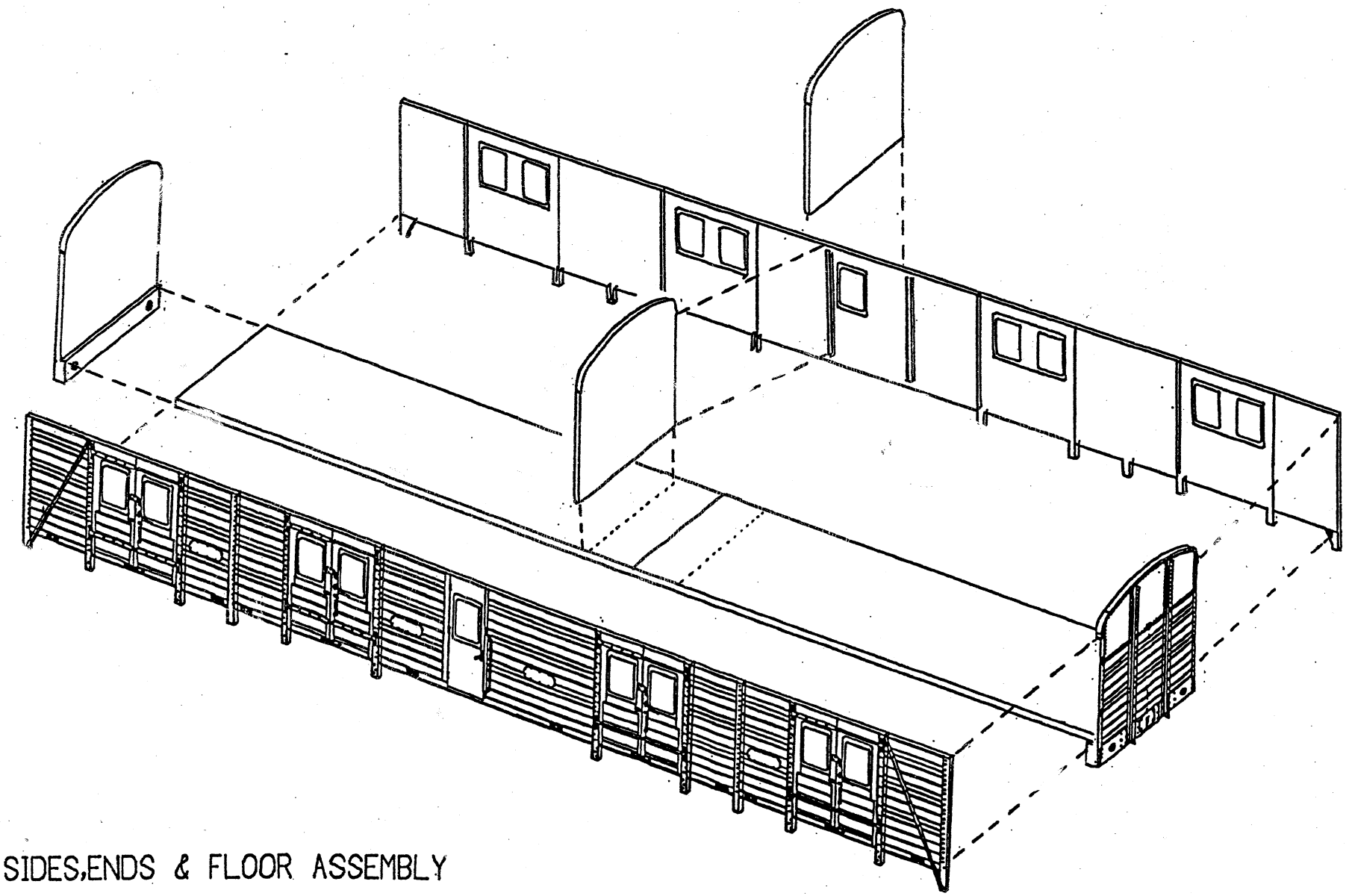

SIDES,ENDS & FLOOR ASSEMBLY

FIG.4

SLATERS PLASTIKARD LTD

DYNAMO ASSEMBLY

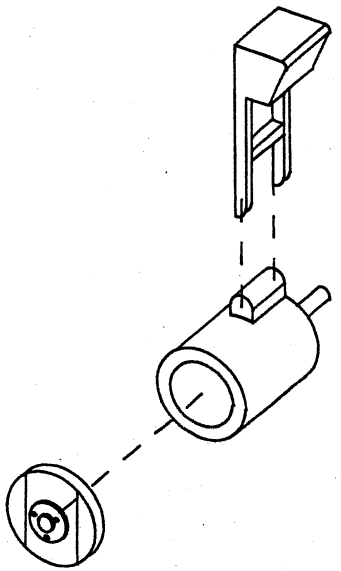

BATTERY BOX ASSEMBLY

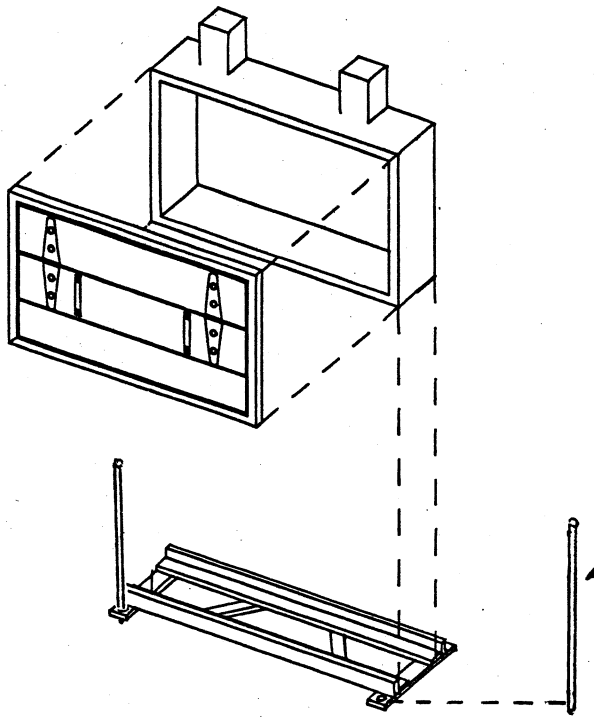

NOTE:
TIE BARS TO
BE FITTED TO
THE BATTERY BOX
CARRIAGE USING
0.030" DIA WIRE

BACK OF SOLEBAR

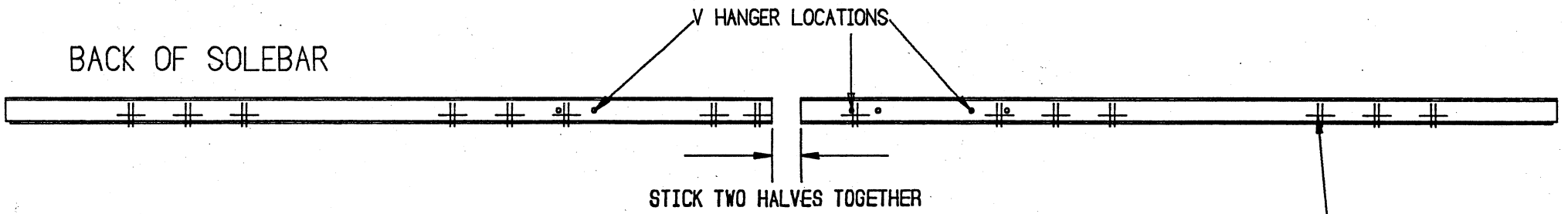

DRILL ALL POINTS ⊕ USING
A NO.76 DRILL (0.5 MM).
THESE HOLES WILL THEN
BE USED TO LOCATE
STEP BOARD SUPPORTS

UNDERFRAME COMPONETS & SOLEBAR ASSEMBLY

FIG.5

SLATERS PLASTIKARD LTD

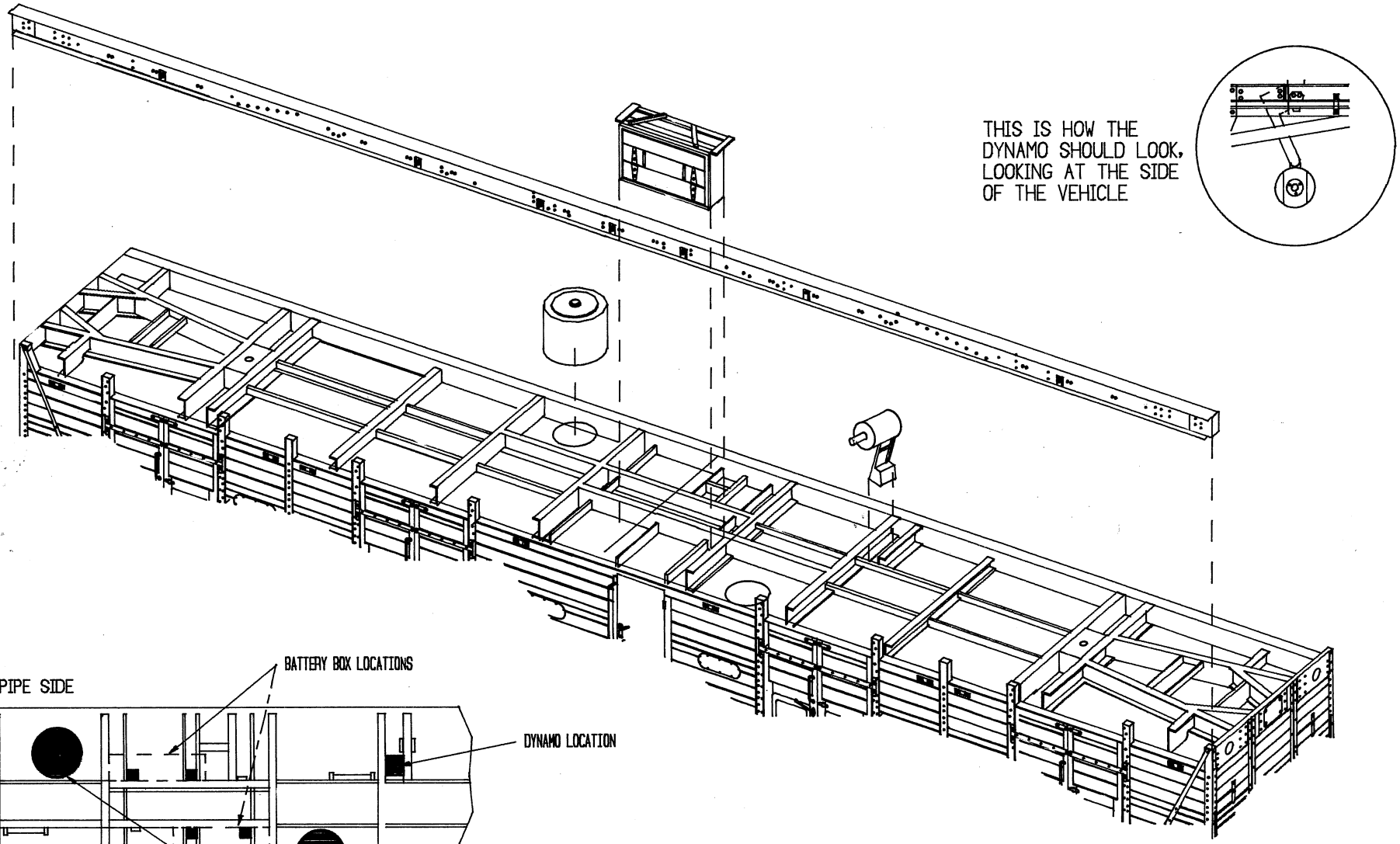

THIS IS HOW THE DYNAMO SHOULD LOOK, LOOKING AT THE SIDE OF THE VEHICLE

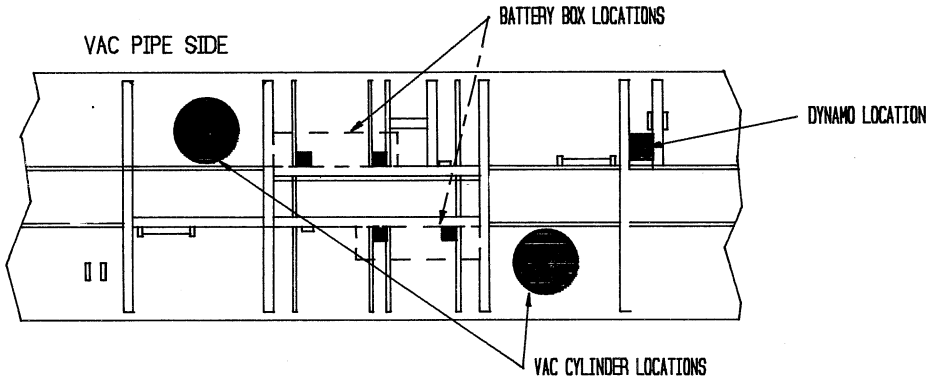

UNDERFRAME ASSEMBLY

FIG.6

SLATERS PLASTIKARD LTD

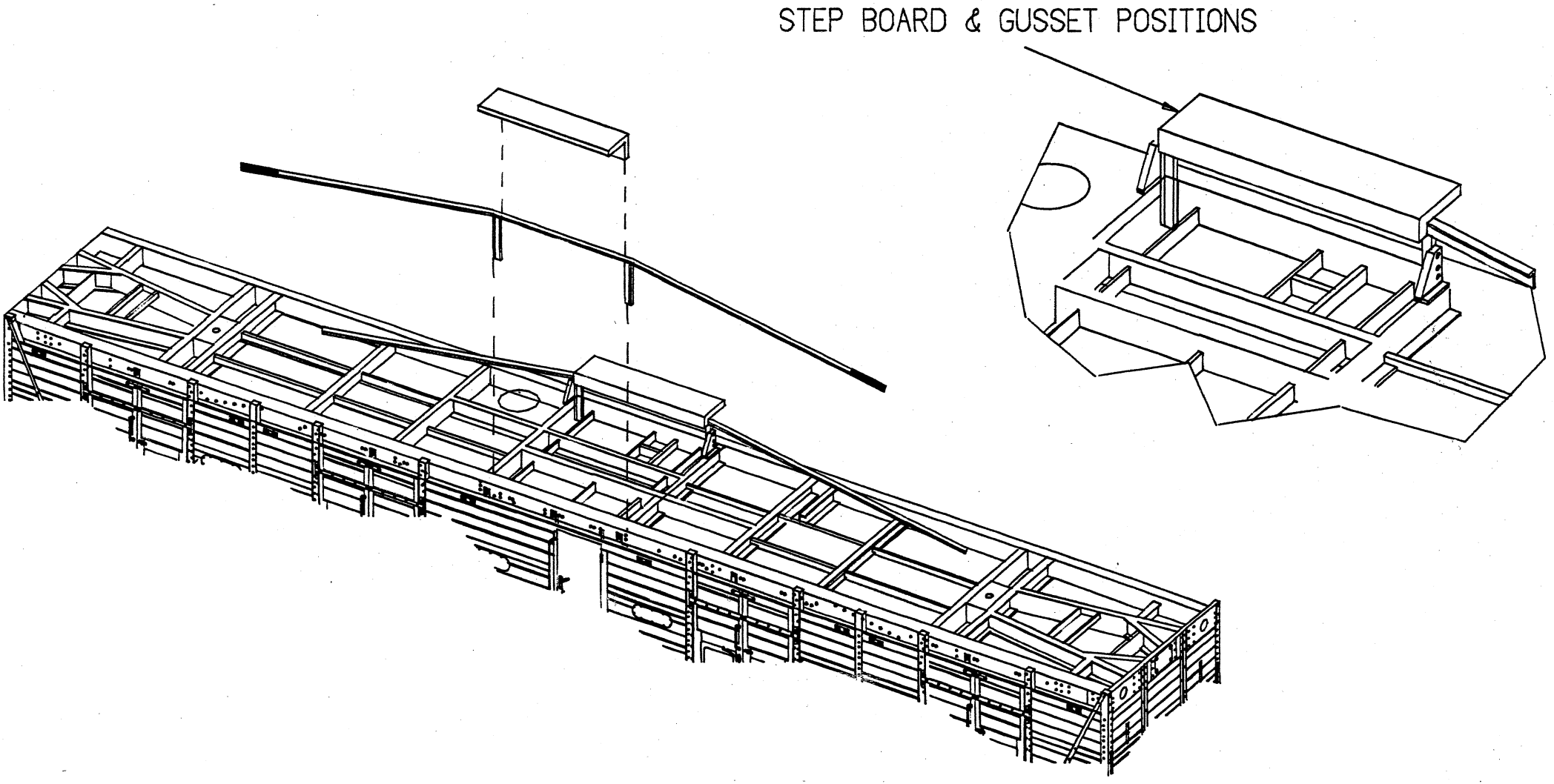

FIG.7

SLATERS PLASTIKARD LTD

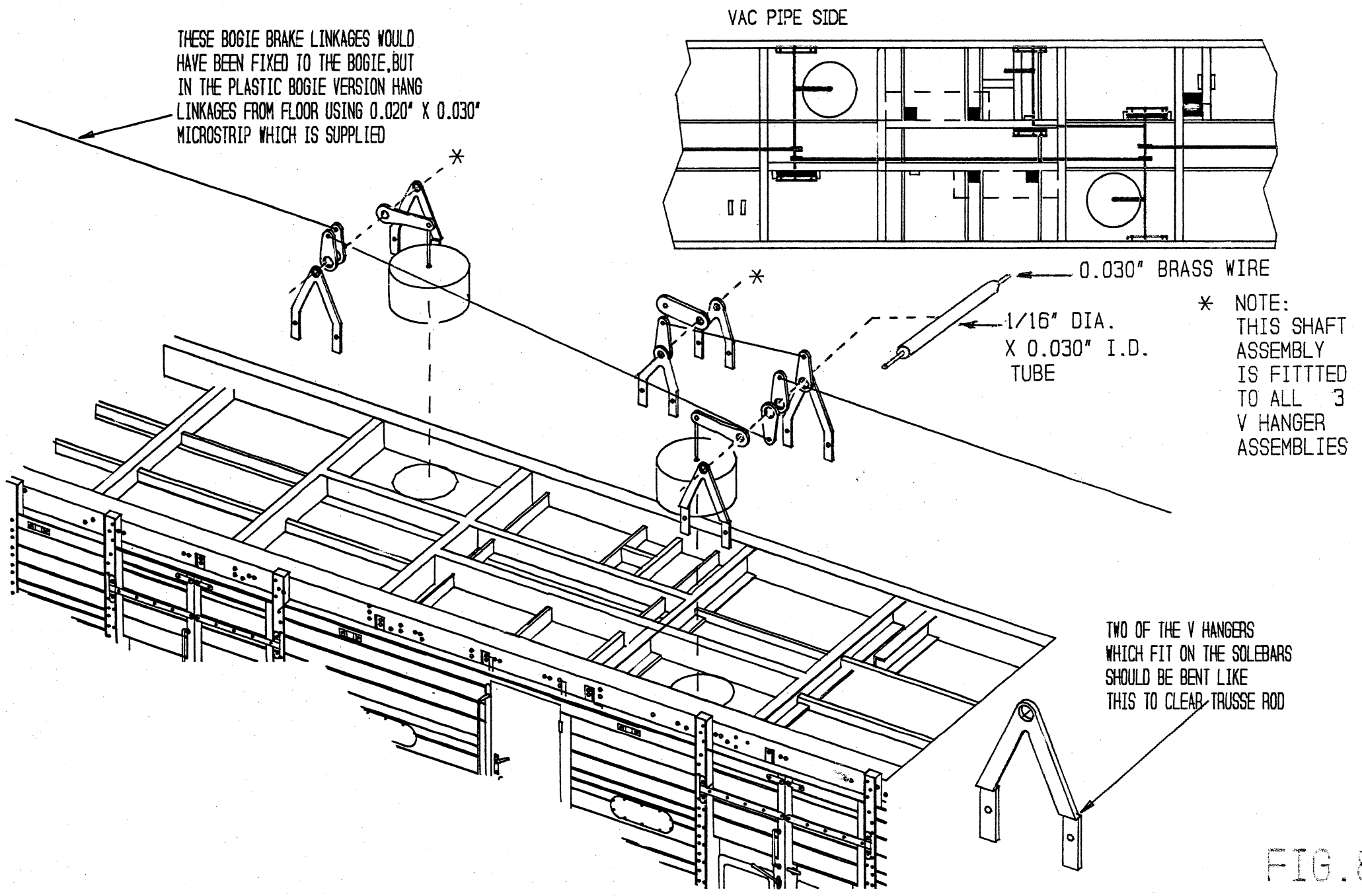

FIG.8

SLATERS PLASTIKARD LTD

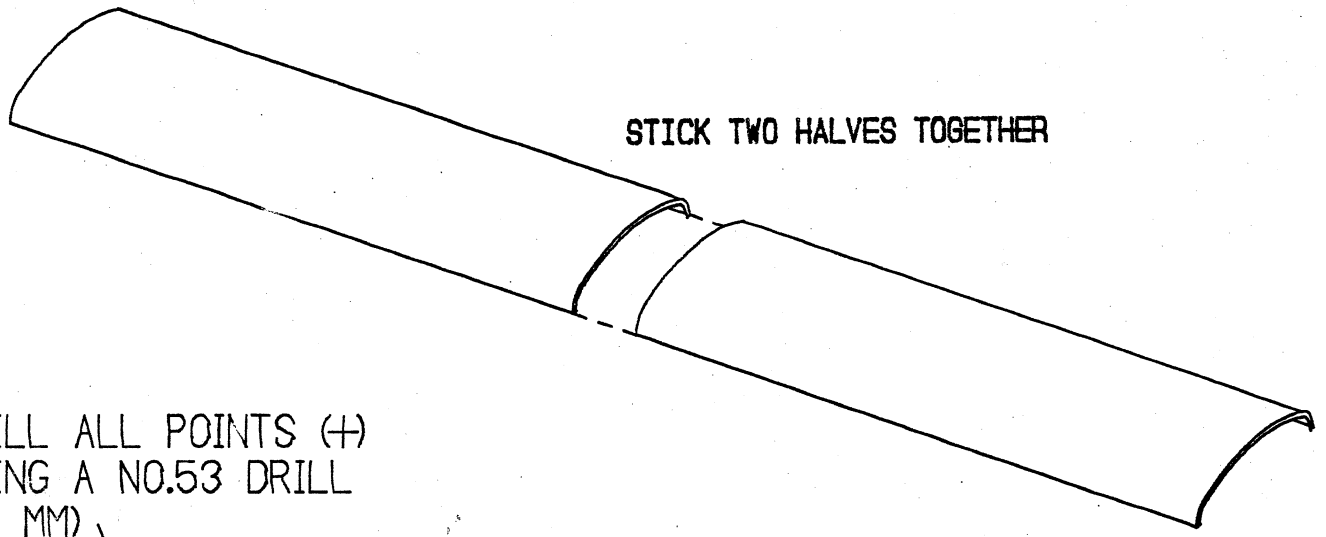

DRILL ALL POINTS (+)
USING A NO.53 DRILL
(1.5 MM)

PLAN VEIW

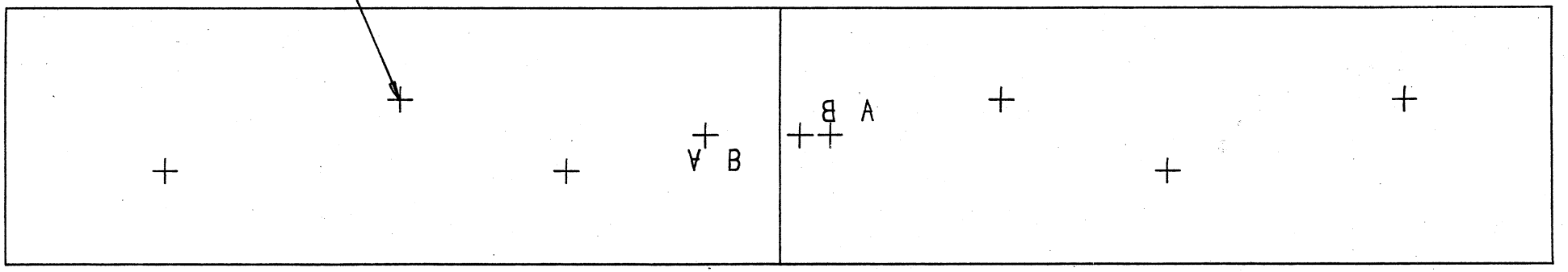

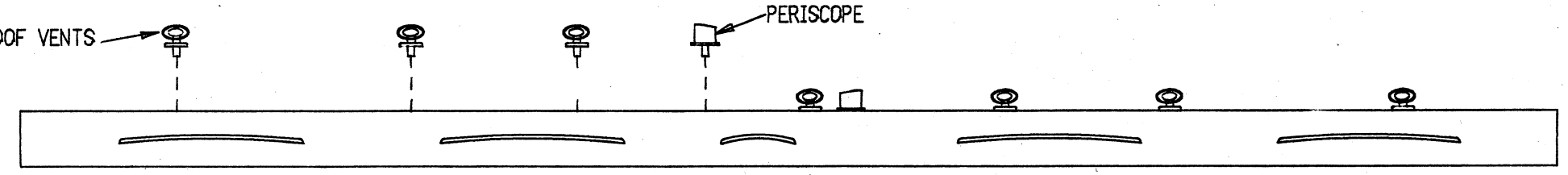

SIDE VEIW

ROOF ASSEMBLY

FIG.9

SLATERS PLASTIKARD LTD

PLAN VEIW OF THE UNDERSIDE OF BOGIE

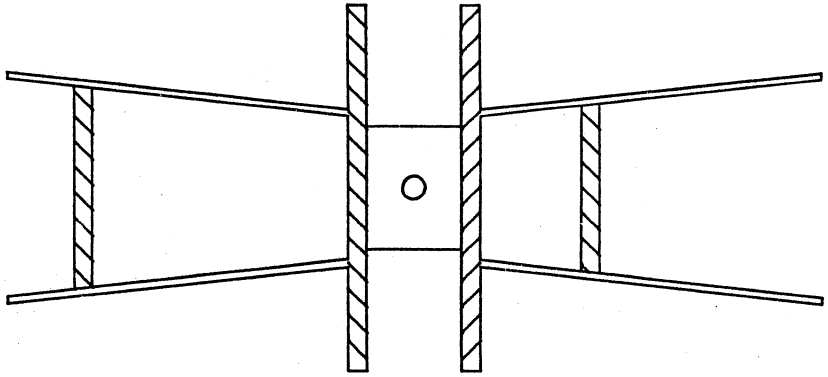

NOTE:
ALL STEEL WORK WHICH IS CROSSHATCHED ▨ STICK 0.020" X 0.060" MICROSTRIP WHICH IS PROVIDED

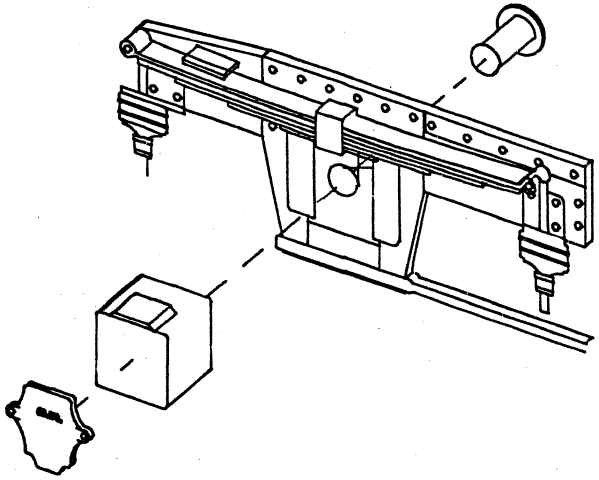

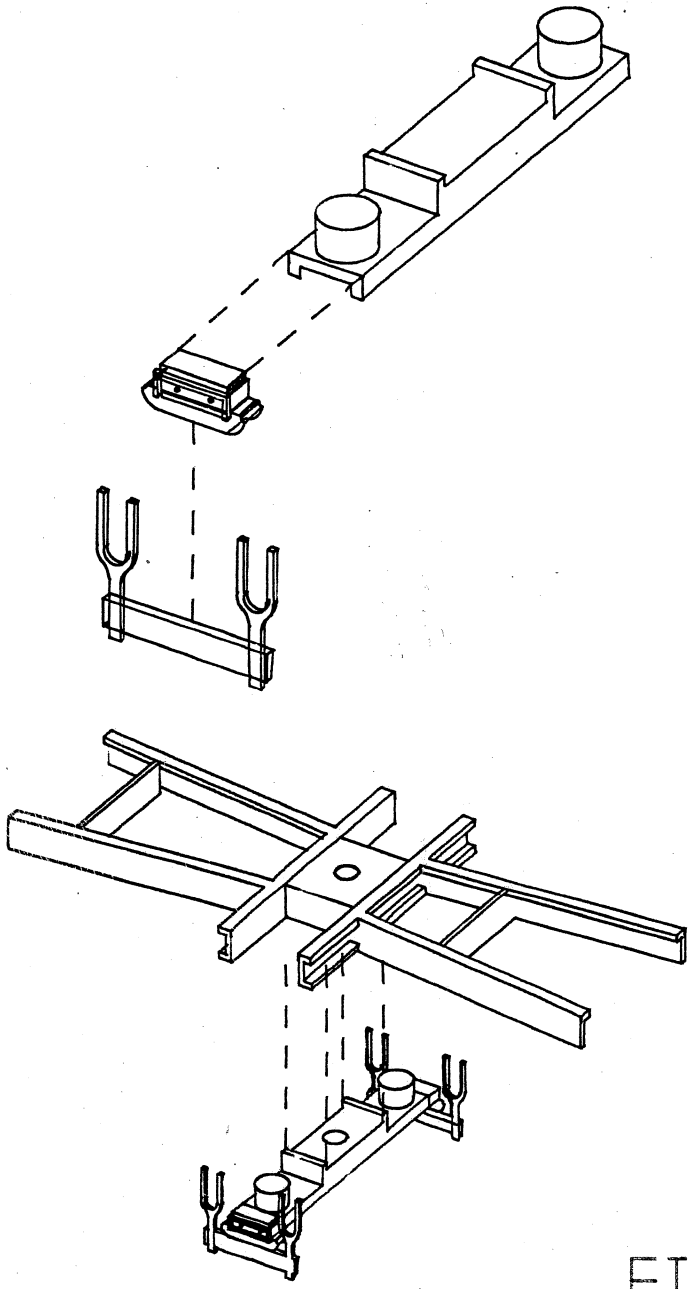

BOGIE COMPONENT ASSEMBLY

FIG.10

SLATERS PLASTIKARD LTD

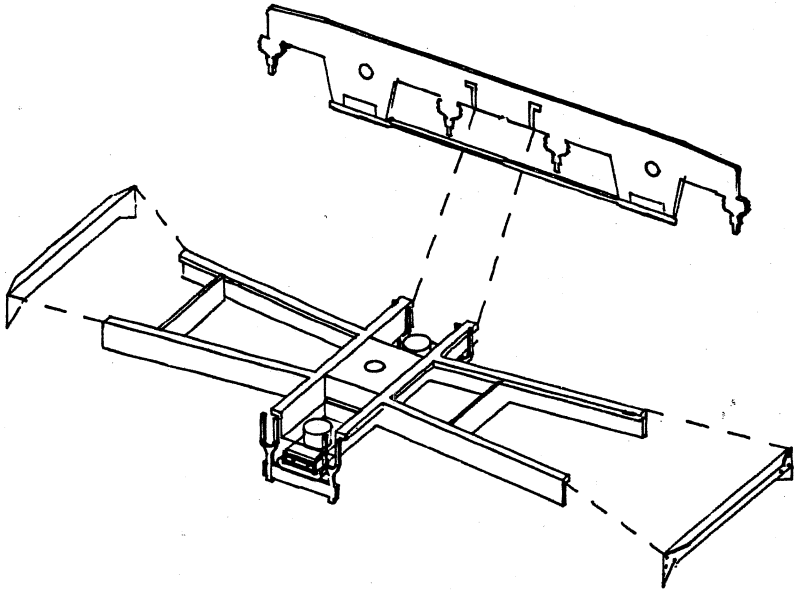

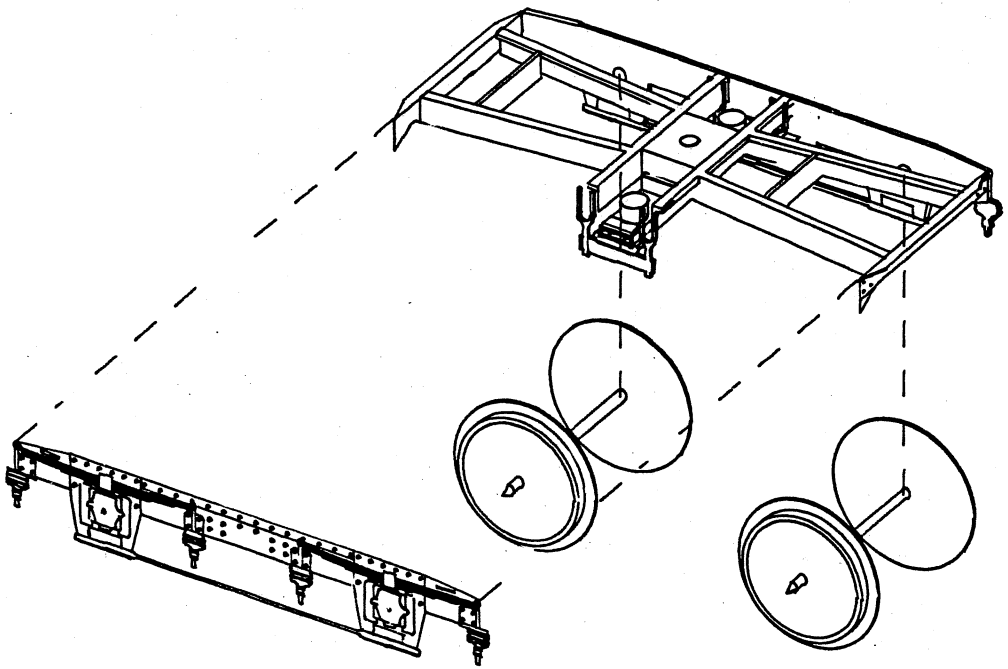

NOTE:
AN 8BA BOLT
FASTENS THE BOGIE
TO THE BODY
WITH AN 8BA
WASHER IN BETWEEN

BRAKE HANGER LOCATIONS

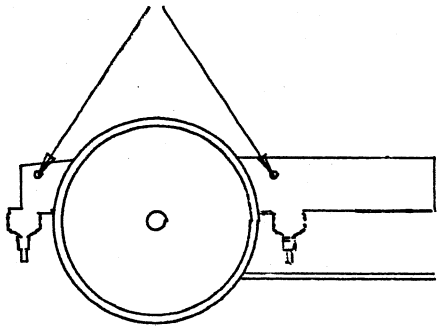

BRAKE SHOES IN POSITION

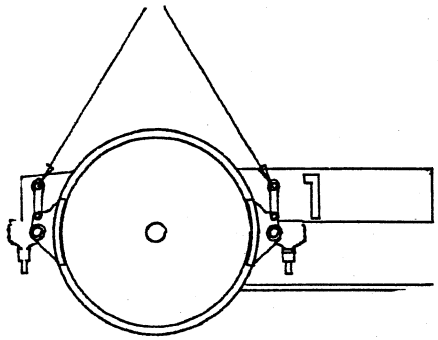

BOGIE ASSEMBLY

FIG.11

SLATERS PLASTIKARD LTD

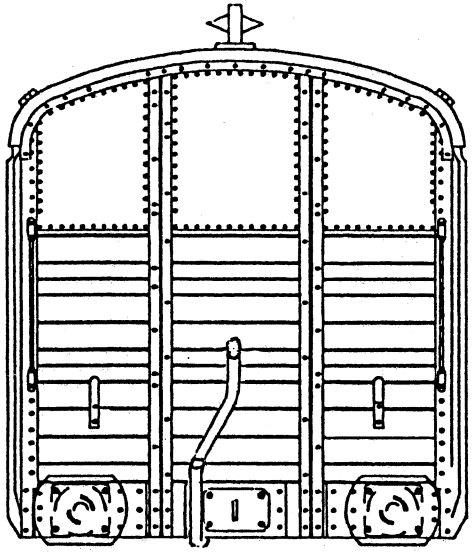

VAC PIPE LOCATION

THIS SHOWS THE DOOR & GUARDS DOOR DETAIL

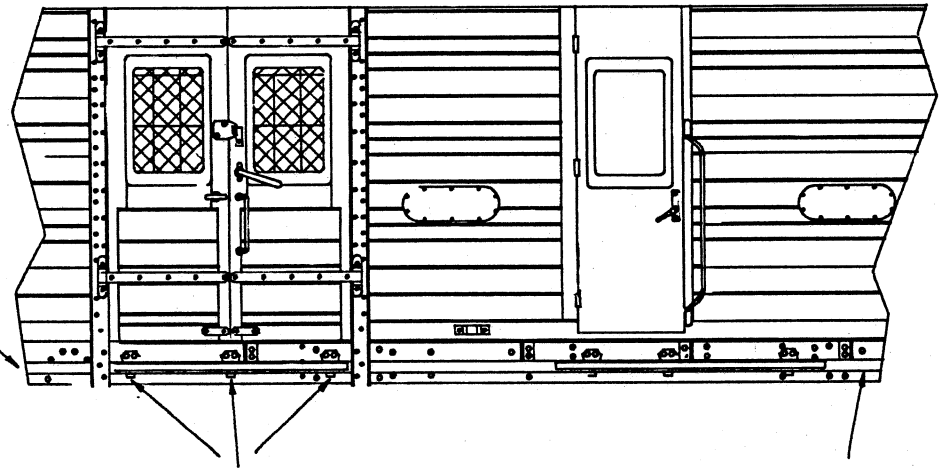

SIDE VEIW OF SOLEBAR

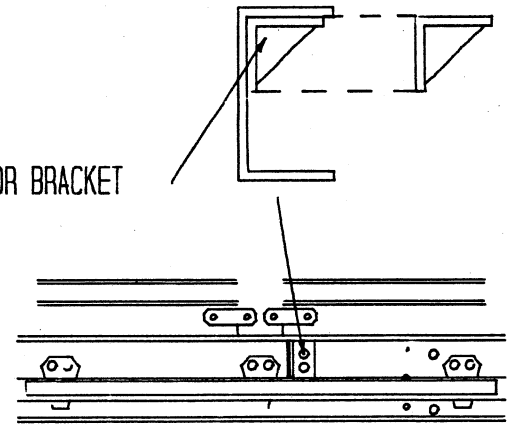

NOTE:
VAC PIPE WAS ONLY FITTED
TO ONE SIDE OF VEHICLE

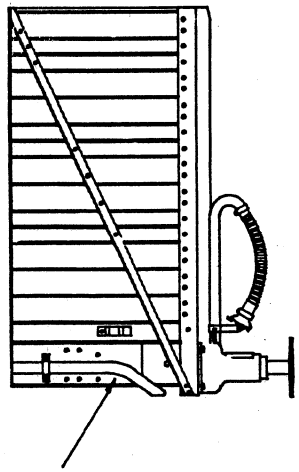

BEND RODDING AS SHOWN ABOVE

FIG.12