Slater's Plastikard Ltd
Old Road, Darley Dale
Matlock, Derbyshire, DE4 2ER
Tel: 01629 734053; Fax: 01629 732235
www.slatersplastikard.com

16W07
16mm Scale
War Department Light Railways Class A Wagon

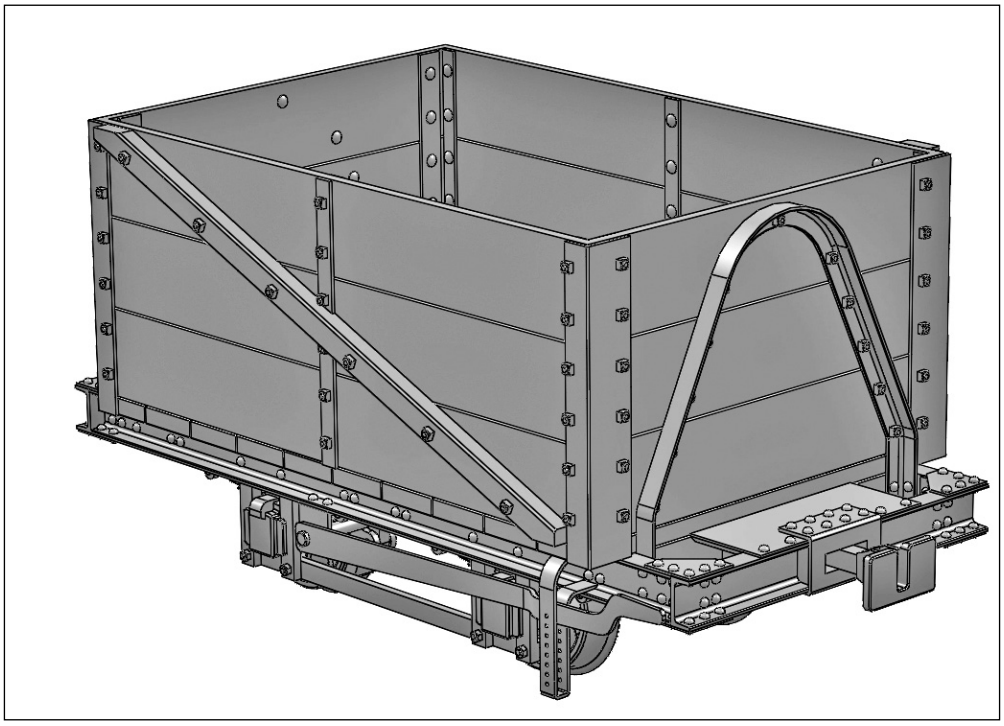

INTRODUCTION

Prototype Information

The War Department Light Railways formed a vital link in the supply chain for the British Army in France and Belgium during the Great War of 1914-1918 (often referred to as the First World War). Indeed without them, the War could not have been conducted in the way it was. However, they are often overlooked, or even completely ignored by military historians, perhaps because of their relatively benign role - their equipment was designed for carrying supplies, not for killing the enemy!

The French and German governments had been building and stocking up on equipment for their strategic light railways since the end of the Franco-Prussian War late in the 19th century. Both had chosen to standardise on a track gauge of 60cm (approximately 2 feet). The British military authorities, used light railways at various establishments, but were ill-prepared when the Great War started, and had a lot of catching up to do very rapidly. It was only at this stage that they decided to adopt the same track gauge as the French for their light railways (having previously thought that the British "Colonial" gauge of 2ft-6in would be more suitable). British locomotive builders were not able to cope with demand, partly because of their "hand-made" manufacturing techniques, and partly because much capacity had been taken over for weapon and munition making. Hence the need for the well-know American-built Baldwin 4–6–0 tank locos. British rolling stock builders were in a better position, and virtually all the wagons used by the WDLR were British built.

Apart from a few "home-made" items of rolling stock, the first standard wagons supplied were the Classes A, B and C. The A Class being were short 4 wheelers, the B Class were longer 4 wheelers, and the C Class were short bogie vehicles. There were many minor variations, A class variation depicted in this kit has fixed sides and ends, the latter supported by an inverted U shaped angle iron. Others had removable sides or ends (or both). We are grateful to Peter Foley for the use of his research into these vehicles in the creation of this kit.

These wagons had a hard and short life in the rigours of the Great War, and none are known to survive to

the present day, although Robert Hudson of Leeds did supply vehicles of a fairly similar design into the 1930s. These wagons were largely superceded later in the War by the Class D bogie wagons (also the subject of a Slater's kit) and its derivations.

HEALTH AND SAFETY

Resin

The main castings are made from Polyurethane Resin, which should not cause any safety problems in normal use. Do not subject the material to excessive heat such as flame or soldering iron as, apart from damage to the fine detail, unpleasant fumes will be given off. For the same reason, do not use a power drill or other power cutting tools, as heat will be generated. When filing or sanding (e.g. to remove moulding 'pips') do not breathe in the fine dust. Ideally you should wear a suitable dust mask or use 'wet and dry' paper (used wet) to prevent dust being caused.

MODEL INFORMATION

This kit will enable you to build an accurate replica of a WDLR Class A wagon. Construction is largely from detailed polyurethane components, and comes complete with metal tyred wheelsets, brass bearings and scale couplings.

Tools Needed

The following tools are needed, most of which will already be in the toolkit of the average modeller.

"Stanley" type knife	for removing the etched brass items from their fret.
End Cutters or Piercing Saw	for removing brass castings from their sprues.
Assortment of small files	for finishing removal of pips and tabs.

Cleaning Up Resin Mouldings

All moulding sprues and 'pips' should be removed, using a sharp knife, then finished off with a file or 'wet and dry' paper. If at any stage during assembly you damage the resin parts the following tips are offered for their repair.

- If the part breaks 'cleanly' and will fit back together properly, it can be stuck with a cyanoacrylate (superglue) type adhesive.
- Other damage, such as gouges or holes drilled too deep, are best repaired with car body filler.
- Badly damaged breaks are better joined with epoxy and the resulting cracks repaired with filler.

Joining Resin Components

The best way of joining these is with a 2-part epoxy adhesive (Araldite or similar). However, this will be slow and tedious, so a compromise is to join the parts with superglue (cyano/ACC) which is almost instant but not very strong. Once everything is in the right place and reasonably secure, the joints can be reinforced with a fillet of epoxy and left to set for the manufacturers recommended period. Obviously, this can only be done where the fillet will not show on the finished model, such as under the floor where the underframe is attached to the body.

Painting and Finishing

Nobody knows what colour these wagons were painted during the Great War, but it is most likely that they were painted in plain Admiralty Grey (use Great Western Railway wagon grey).

Very soon they would have become very worn and coated in whatever material was being carried; in northern France this would have been a chalky soil used in all sorts of construction work. Repairs in the field would probably never be painted.

The secret of good model painting is preparation even when the final finish is to be very rough! Make sure that all parts are thoroughly clean, dry and free of any grease. The resin parts should be washed with a mildly abrasive kitchen cream cleaner, such as Cif (ex Jif). Use an old toothbrush to work into the corners and crevices. When it is clean, rinse in clean water. Once thoroughly clean and dry try not handle the model. Leave to dry, at least overnight, before applying the primer. Cover with a clean cardboard box or similar to prevent dust settling. It is common practice these days for metal parts (such as the wheel tyres) to be treated with a chemical metal black (Gun Blue or similar) either before painting or to avoid the need for painting.

The easiest way to prime and paint a model like this is with a car type aerosol spray can. Make sure it is the modern acrylic type not the older cellulose type. To prime the resin parts only needs a light mist coat from the aerosol spray. Read the manufacturer's recommendations on the minimum drying time. If you are going to follow a car aerosol spray primer with the same maker's top coat, ten minutes may be sufficient. However,

with many paints you will find that at least 24 hours should elapse before the top coat is applied.

If you want the metal parts to be rusty, there are several products available for simulating very realistic rust. Two products we know about (and we have no connection with either the manufacturers or suppliers of them) are American made but available in the UK. One is called "Rustall" and the other "Modern Options Instant Rust"; both are available from traders at model railway exhibition and an internet search will reveal numerous other suppliers. There are now numerous very good books available on the subject of painting and weathering and we recommend that you read one of them.

ASSEMBLY INSTRUCTIONS

To avoid tedious repetition, it will be assumed in each sub-section that the parts have been removed from the moulding sprue, etc., that tabs, moulding pips, etc., have been removed and preliminary cleaning done ready for gluing. In these instructions, “gluing” implies using a suitable glue of your choice for assembly. See note opposite ("Joining Resin Components") for one suggestion.

Stage 1 - Assemble Headstocks to body

Assemble and glue the two headstocks to the ends of the body as shown, using the locating strips and notches.

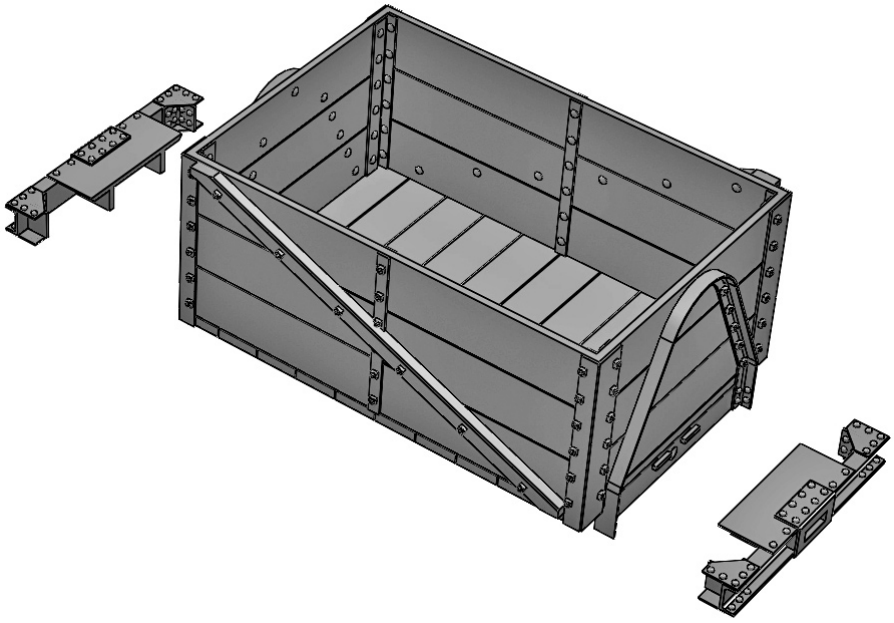

Stage 2 - Assemble Underframe

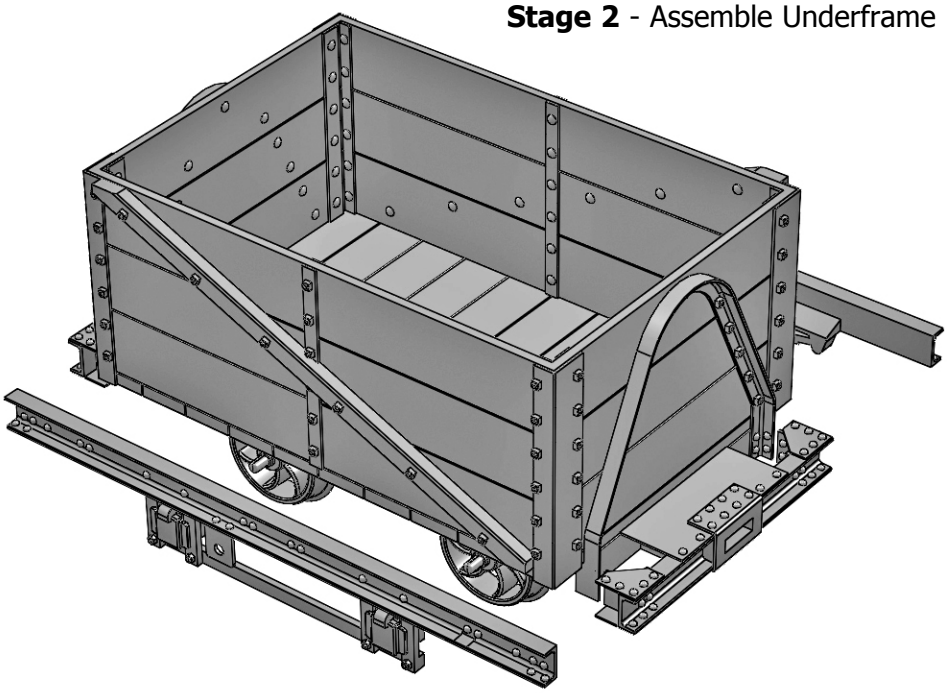

Note: This stage permanently traps the wheelsets into the frame. You may wish to do some painting and finishing before this happens.

Push the 4 brass bearings into the side channels. Make sure that the outside of the bearings are flush with the rear face of the resin axleboxes. (The bearings may need to be retained by the tiniest drop of Superglue/ACC/Cyano, but make sure you don't inadvertently glue the axle journals into the bearings!). Then assemble the side channels, body/headstocks and wheelsets as shown. Do this right way up with the wheels on a level surface (a piece of mirror or plate glass is ideal, but not essential).

Stage 3 - Assemble Brake Cross Rod, Brake Blocks, Brake Lever and Brake Guard

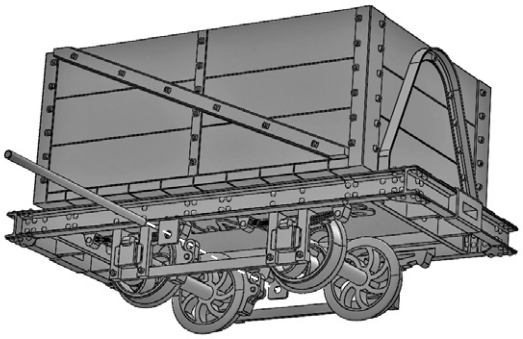

Trim the ends of the brake cross rod to a length of 61mm, check the the various holes are 2mm diameter and insert as shown, trapping the brack blocks in place.

Attach the brake lever and brake guard as shown, noting that there is a slight indentation in the solebar for locating the latter.

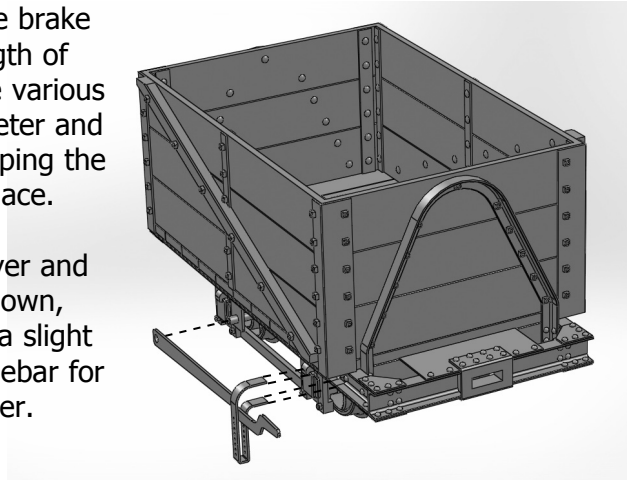

Stage 4 - Assemble Couplings

Assemble the couplings as shown, trapping the spring between the outer and inner headstocks.

The smaller picture shows one method of assembling the coupling links. If you want another type of coupling or some form of automatic coupling, you will have to devise your own assembly method!

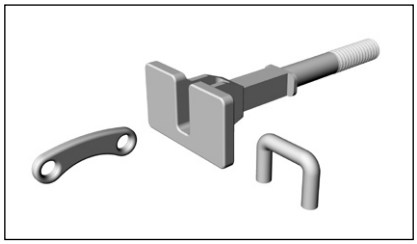

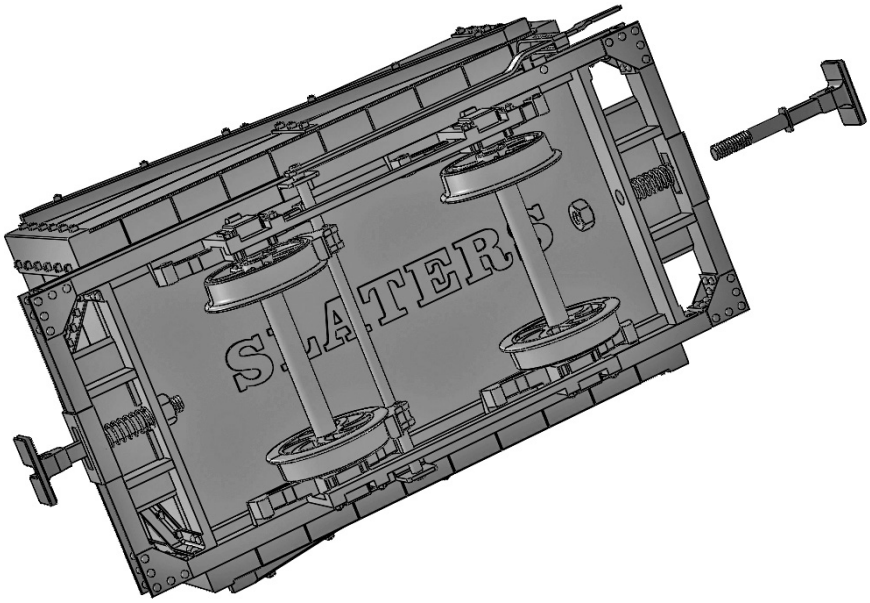

Parts List

Ref. 16W07: WDLR A Class Wagon

Part Number	Description	No. Per Kit
Resin Mouldings		
16W0701	Main Body	1
16W0702	Headstock	2
16W0703	Braked Side Channel	1
16W0704	Non-Braked Side Channel	1
16W0705	Brake Block	2
Etchings		
16W0710	Brake Lever and Brake Guard (2 items on sheet)	1
Brass Castings		
X16B0121	Couplings (4 items on sprue)	1
Other Parts		
2mm Brass Rod	65mm long (Brake cross rod)	1
1615WD	Wheelsets (2 x wheels mounted on axle)	2
1211	Bearings ("4mm coach" bearings)	4
–	6BA Brass Nut	4
–	G1 Coupling Spring	2
–	60thou (1.5mm) brass wire (for coupling pins) 2"	1
–	Instructions	1